MOBILE PHONE DETECTOR

A Minor Project report

Submitted in partial fulfillment of the requirements

for the degree of

BACHELOR OF ENGINEERING

in

[ELECTRONICS & COMMUNICATION]

Submitted To

RAJIV GANDHI PROUDYOGIKI VISHWAVIDYLAYA,BHOPAL [M.P.]

Submitted by

PRAVEEN KUMAR

[Enrollment No-0552ec151015]

Under the supervision of

Prof. VINEETASHAKYA

Department of Electronics & CommunicationEngineering

CORPORATE INSTITUTE OF SCIENCE & TECHNOLOGY, BHOPAL

SESSION:-2015-19

Corporate Institute of Research & Technology, Bhopal

Department of Electronics & Communication Engineering

CERTIFICATE

This is to certify that the project entitled**"Mobile phone detector"**being Submitted by **PRAVEEN KUMAR [Enrollment No-0552ec151015]** in partial fulfillment of the requirement for the award of Bachelor of engineering in **"Electronics & Communication"** to Rajiv Gandhi Proudyogiki Vishwavidyalaya, Bhopal(M.P.) during the academic year 2017-18is a piece of work, carried out by him under my supervision and guidance in the Department of Electronics & Communication Engineering Corporate Institute of Research & Technology, Bhopal.

Approved

Prof. VINEETA SHAKYA
[Project Guide]
(Dept. of Electronics & Comm. Engg)

Prof . JAYANT SHUKLA
[H.O.D]
(Dept. of Electronics & Comm. Engg)

Corporate Institute of Research & Technology, Bhopal

Department of Electronics & Communication Engineering

DECLARATION

I **PRAVEEN KUMAR** , a student of B.E. **"ELECTRONICS & COMMUNICATION"** session 2015-19Corporate Institute of Science &Technology, Bhopal (M.P.) hereby declare that the Project entitled**"Mobile phone detector"**is the outcome of my own work that has been carried out taking care of Engineering Ethics. The work presented does not infringe any patented work and has not been submitted to any other University or anywhere else for the award of any degree or any professional diploma.

PRAVEEN KUMAR
Enrollment No –0552ec151015

Corporate Institute of Research & Technology, Bhopal

Department of Electronics & Communication Engineering

ACKNOWLEDGEMENT

Human Society Survives on mutual dependences and support. I had experienced deeply as I undertook this work, so I would like to thank everyone who had of immense help and encouragement in various ways both directly and indirectly.

Behind every achievement of a student the valuable encouragement & guidance of his/her teacher's lies, without as a student could never know the beauty & fruit of hard work. So I make an effort to acknowledge my esteemed guide **Prof. Project guide** and **Prof., HOD Electronics & Communication Department CIRT, Bhopal** whose excellent & consistent supervision has helped in steering the present work through to its completion.

I wish to acknowledge & express my deep sense of gratitude to all other faculty members of the department, for their continuous support and inspirationfor completion of project.

I am deeply grateful to **Dr. A.N. SINHA, Director,CIRT, Bhopal,**for his consistent encouragement,valuable Guidance providing me resources that helped me to complete thesis work.

PRAVEEN KUMAR
Enrollment No -0552ec151015

ABSTRACT

This handy, pocket-size mobile transmission detector or sniffer can sense the presence of an activated mobile cell phone from a distance of one and-a-half meters. So it can be used to prevent use of mobile phones in examination halls, confidential rooms, etc. It is also useful for detecting the use of mobile phone for Spying and unauthorized video transmission. The circuit can detect the incoming and outgoing calls, SMS and video transmission even if the mobile phone is kept in the silent mode. The moment the Bug detects RF transmission signal from an activated mobile phone, it starts sounding a beep alarm and the LED blinks. The alarm continues until the signal transmission ceases. Assemble the circuit on a general purpose PCB as compact as possible and enclose in a small box like junk mobile case. As mentioned earlier, capacitor C3 should have a lead length of 18 mm with lead spacing of 8 mm. Carefully solder the capacitor in standing position with equal spacing of the leads. The response can be optimized by trimming the lead length of C3 for the desired frequency. You may use a short telescopic type antenna.

Use the miniature 12V battery of a remote control and a small buzzer to make the gadget pocket-size. The unit will give the warning indication if someone uses Mobile phone within a radius of 1.5 meters.

CONTENTS

CHAPTER ONE

CHAPTER TWO

CHAPTER THREE

CHAPTER FOUR

CHAPTER FIVE

ESSARIEE EDUCATION SOCIETY

ESSARJEE EDUCATION SOCIETY

Chapter 1

INTRODUCTION:

This mobile phone detector can sense the presence of an activated mobile phone from a distance of four to five metres. So it can come handy in an examination hall or meetings where mobile phones are not permitted.The circuit can detect incoming and outgoing calls, SMSes, Internet and video transmissions even if a mobile phone is kept in silent mode. When it detects an RF signal from an activated mobile phone, its LED starts blinking and continues to blink until the signal stops.

Circuit diagram of the mobile phone detector :

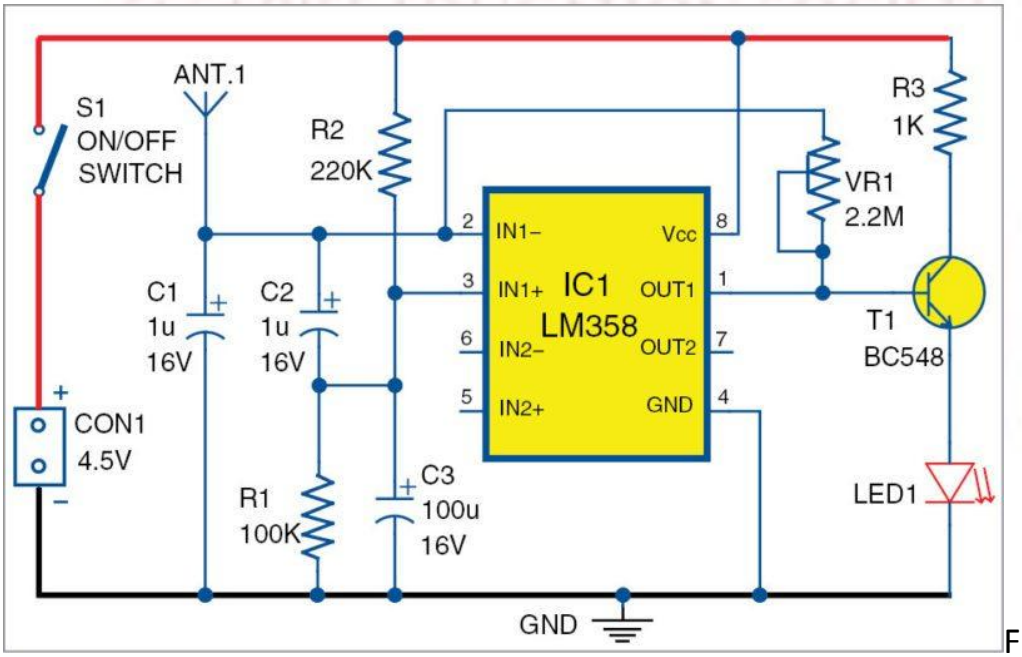

Fig. 2: Circuit diagram of the mobile phone detector

When a mobile phone is active, it radiates RF signal that passes through nearby space. The signal contains electromagnetic RF radiation from the phone.

Capacitor C1 is used in the circuit to detect the RF signal from the mobile phone. When the mobile phone radiates energy in the form of RF signal, C1 absorbs it and passes on to the inputs of IC1. This is indicated by the flashing of LED1. Preset VR1 (2.2M) is used to vary the range of the circuit. Transistor T1 is used to amplify the signal obtained at pin 1 of IC1.

The circuit is applicable for 2G networks, GPRS and network search (manual/automatic). It does not detect 3G, WCDMA and HSDPA network signals so well.

Description of circuit daigram

An actual-size, single-side PCB layout for the mobile phone detector circuit is shown in Fig. 3 and its component layout in Fig. 4. After assembling the circuit on the PCB, enclose it in a suitable plastic box.

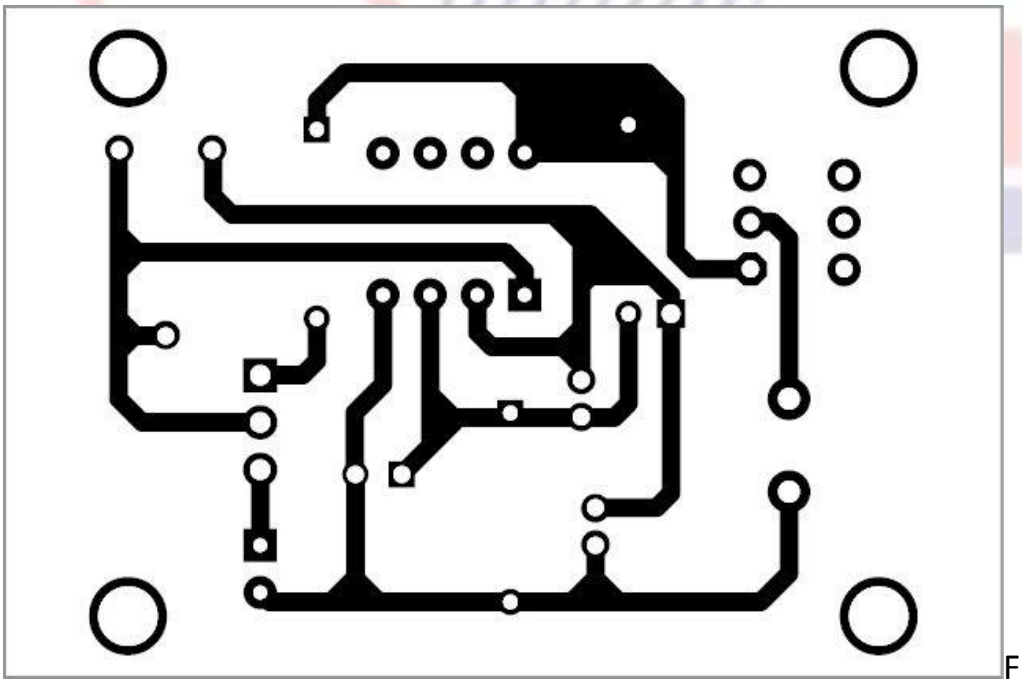

Fig. 3: Actual-size PCB layout for the mobile phone detector circuit

Screen printing:

Screen-printing is the process by which the conductor pattern which is on the film master is transferred on to the copper-clad laminates. With the screen-printing process one can produce PCBs with a conductor width as low as 2.5mm and registration error of just 0.1mm on an industrial scale with a high reliability.

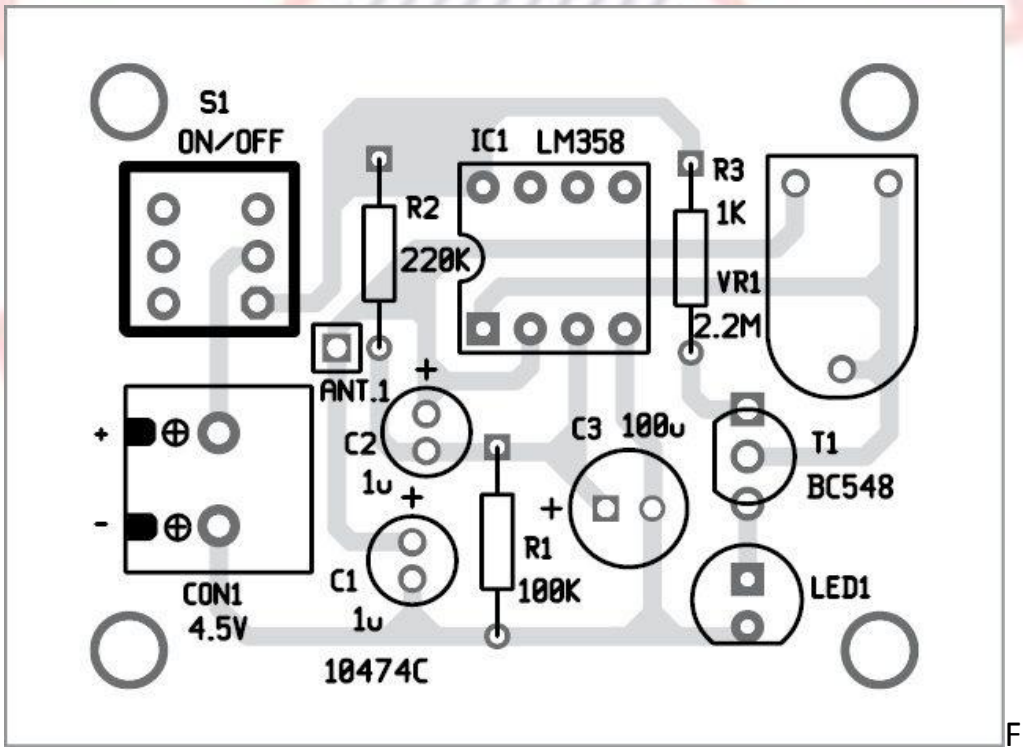

Fig. 4: Component layout of the PCB

Component mounting

Component mounting on the PCB in such a way to minimize the cracking of solder joints due to mechanical stress on the joint. This can be ensured by bending of the axial component lead in a manner to guarantee and optimum retention of the component on the PCB while a minimum stress is introduced on the solder joint. Bending is done with care taken not to damage the component or its leads. The lead bending radius is chosen to be approximately two times the lead diameter. The bent leads should fit into the holes perpendicular to the board so that any stress on the component lead junction is minimized. The component lead bending is done using a bending tool for easy but perfect component preparation.

Soldering:

Soldering is the process of joining metals by using lower melting point metal or alloy with joining surface.

Solder:

Soldering is the process of joining materials. Soldered joints in electronics switches will establish strong electrical connection between components leads. The popularly used solders are alloys of tin and lead melt below the melting point of the tin.

Flux:

In order to make the surface accept to make the solder readily, the component terminals should be free from oxide and other obstructing films. The leads should be cleaned chemically or by abrasion using blades or knives.

A small amount of lead coating can be done on cleaned portion of the lead using soldered iron. This process is called thinning. Zink Chloride or Ammonium Chloride separately or in combination is mostly used as fluxes. These are available in petroleum jelly as paste flux. The residue which remains after soldering may be washed out with more water accompanied by brushing.

Soldering Iron:

It is tool used to melt solder and apply at the joint in the circuit. It operates at 230v supply. The iron bit at the tip of it gets heated within few minutes. 50W or 25W soldering irons are commonly used for soldering purpose.

Soldering Steps:

For proper soldering on PCBs the soldering steps are:

(i) Make the layout of component in the circuit. Plug in the cord of the soldering iron into the mains to get heated.

(ii) Straighten and remove the coating of components leads using a blade or knife. Apply a little flux on the leads. Take a little solder on soldering iron and apply the

molten solder on the leads. Care must be taken to avoid the components to getting heated up.

(iii) Mount the components on PCB by bending the leads of components using noise pliers.

(iv) Apply flux on the joints and solder the joints. Soldering must be done in minimum to avoid the dry soldering and heating up of components.

(v) Wash the residue using water and brush.

ESSARJEE EDUCATION SOCIETY

Chapter 3

List of Components

PARTS LIST	
Semiconductors:	
IC1	- LM358 op-amp
T1	- BC548 npn transistor
LED1	- 5mm LED
Resistors (all 1/4-watt, ±5% carbon):	
R1	- 100-kilo-ohm
R2	- 220-kilo-ohm
R3	- 1-kilo-ohm
VR1	- 2.2-mega-ohm preset
Capacitors:	
C1, C2	- 1µF, 16V electrolytic
C3	- 100µF, 16V electrolytic
Miscellaneous:	
CON1	- 2-pin terminal connector
S1	- On/off switch
ANT.1	- 15cm single-strand wire antenna
	- 4.5V DC power supply

Resistors:

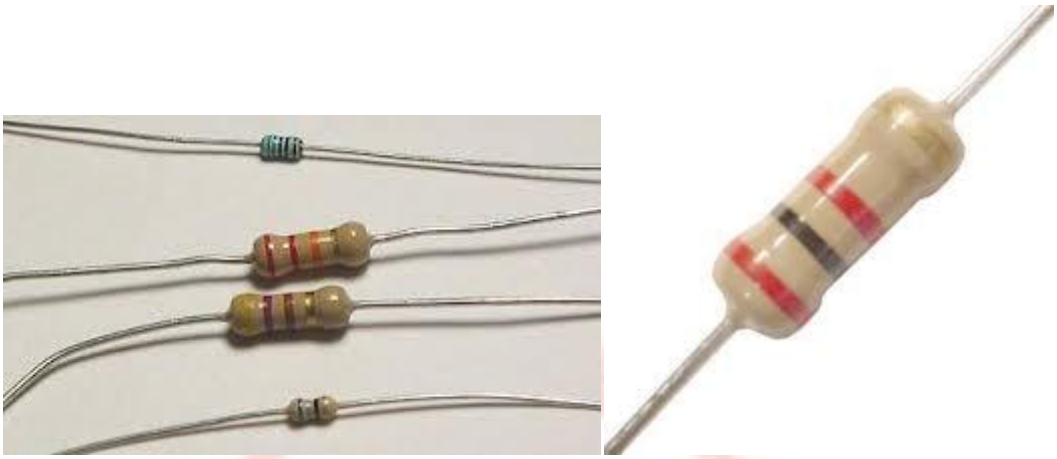

Figure 3.1: Resistors

A resistor is a two-terminal electronic component that produces a voltage across its terminals that is proportional to the electric current through it in accordance with Ohm's law:

$$V = IR$$

Resistors are elements of electrical networks and electronic circuits and are ubiquitous in most electronic equipment. Practical resistors can be made of various compounds and films, as well as resistance wire (wire made of a high-resistivity alloy, such as nickel/chrome).The primary characteristics of a resistor are the resistance, the tolerance, maximum working voltage and the power rating. Other characteristics include temperature coefficient, noise, and inductance. Less well-known is critical resistance, the value below which power dissipation limits the maximum permitted current flow, and above which the limit is applied voltage. Critical resistance depends upon the materials constituting the resistor as well as its physical dimensions; it's determined by design. Resistors can be integrated into

hybrid and printed circuits, as well as integrated circuits. Size, and position of leads (or terminals) are relevant to equipment designers; resistors must be physically large enough not to overheat when dissipating their power.

Significance:

Resistors are found in nearly every circuit because their ability to limit current allows them to protect electronics from circuit overload or destruction. Diodes, for example, are current sensitive and so are almost always coupled with a resistor when they are placed inside of a circuit. Resistors are also combined with other electrical components to form important fundamental circuits. They can be paired with capacitors to perform as filters or voltage dividers. Another role is that of the formation of oscillatory AC circuits when they are coupled with capacitors and inductors.

Capacitors:

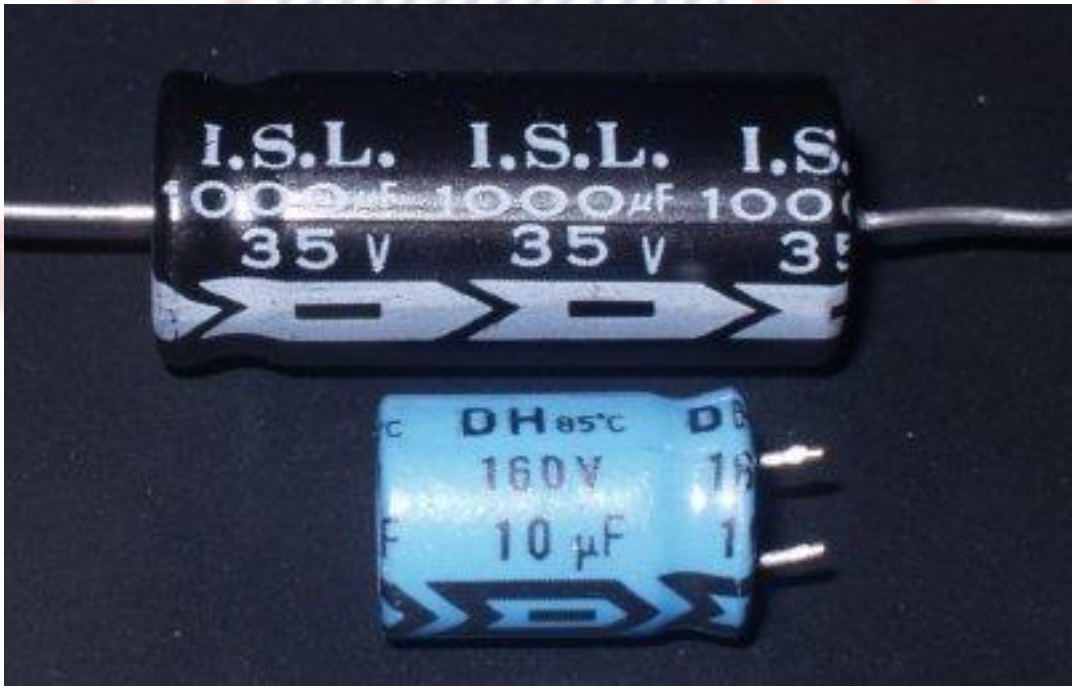

Figure 3.2: Capacitors

A capacitor or condenser is a passive electronic component consisting of a pair of conductors separated by a dielectric. When a voltage potential difference exists

between the conductors, an electric field is present in the dielectric. This field stores energy and produces a mechanical force between the plates. The effect is greatest between wide, flat, parallel, narrowly separated conductors.

Capacitance (symbol C) is a measure of a capacitor's ability to store charge. A large capacitance means that more charge can be stored. Capacitance is measured in farads, symbol F. However 1F is very large, so prefixes (multipliers) are used to show the smaller values.

Electrolytic capacitor:

Figure 3.4: electrolytic capacitor

An electrolytic capacitor is a type of capacitor that uses an ionic conducting liquid as one of its plates with a larger capacitance per unit volume than other types. They are valuable in relatively high-current and low-frequency electrical circuits. This is especially the case in power-supply filters, where they store charge needed to moderate output voltage and current fluctuations in rectifier output. They are also widely used as coupling capacitors in circuits where AC should be conducted but DC should not.

Electrolytic capacitors can have a very high capacitance, allowing filters made with them to have very low corner frequencies.

Transistor:

Figure 3.5: Transistors

A transistor is a semiconductor device commonly used to amplify or switch electronic signals. A transistor is made of a solid piece of a semiconductor material, with at least three terminals for connection to an external circuit. A voltage or current applied to one pair of the transistor's terminals changes the current flowing through another pair of terminals. Because the controlled (output) power can be much more than the controlling (input) power, the transistor provides amplification of a signal. Some transistors are packaged individually but most are found in integrated circuits.

LED:

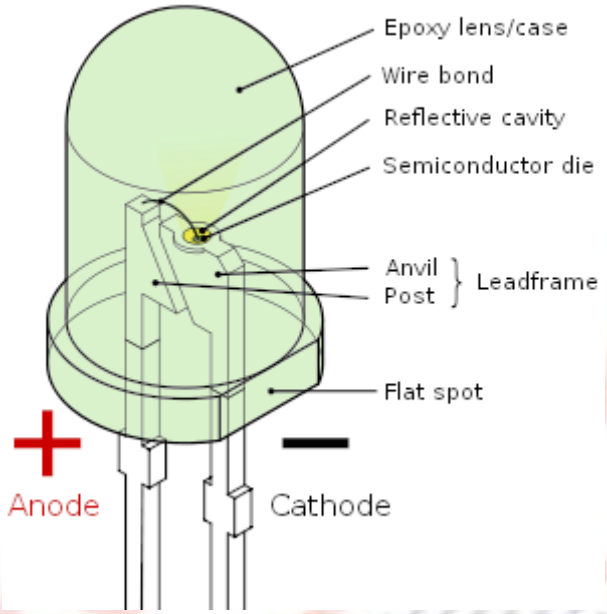

A light-emitting diode (LED) is an electronic light source. LEDs are used as indicator lamps in many kinds of electronics and increasingly for lighting. LEDs work by the effect of electroluminescence, discovered by accident in 1907. The LEDwas introduced as a practical electronic component in 1962. All early devices emitted low-intensity red light, but modern LEDs are available across the visible, ultraviolet and infra red wavelengths, with very high brightness.

Electronic symbol

Figure 3.6: LED

LEDs are based on the semiconductor diode. When the diode is forward biased (switched on), electrons are able to recombine with holes and energy is released in the form of light. This effect is called electroluminescence and the color of the light is determined by the energy gap of the semiconductor. The LED is usually small in area (less than 1 mm^2) with integrated optical components to shape its radiation pattern and assist in reflection.

Piezo Buzzer:

Figure 3.8: Piezo Buzzer

Piezoelectricity is the ability of some materials (notably crystals and certain ceramics, including bone) to generate an electric field or electric potential[1] in response to applied mechanical stress. The effect is closely related to a change of polarization density within the material's volume. If the material is not short-circuited, the applied stress induces a voltage across the material. The word is derived from the Greek piezo or piezein, which means to squeeze or press.

A buzzer or beeper is a signaling device, usually electronic, typically used in automobiles, household appliances such as microwave ovens, or game shows.

It most commonly consists of a number of switches or sensors connected to a control unit that determines if and which button was pushed or a preset time has lapsed, and usually illuminates a light on the appropriate button or control panel, and sounds a warning in the form of a continuous or intermittent buzzing or beeping sound.

Pin Configuration of IC LM358:

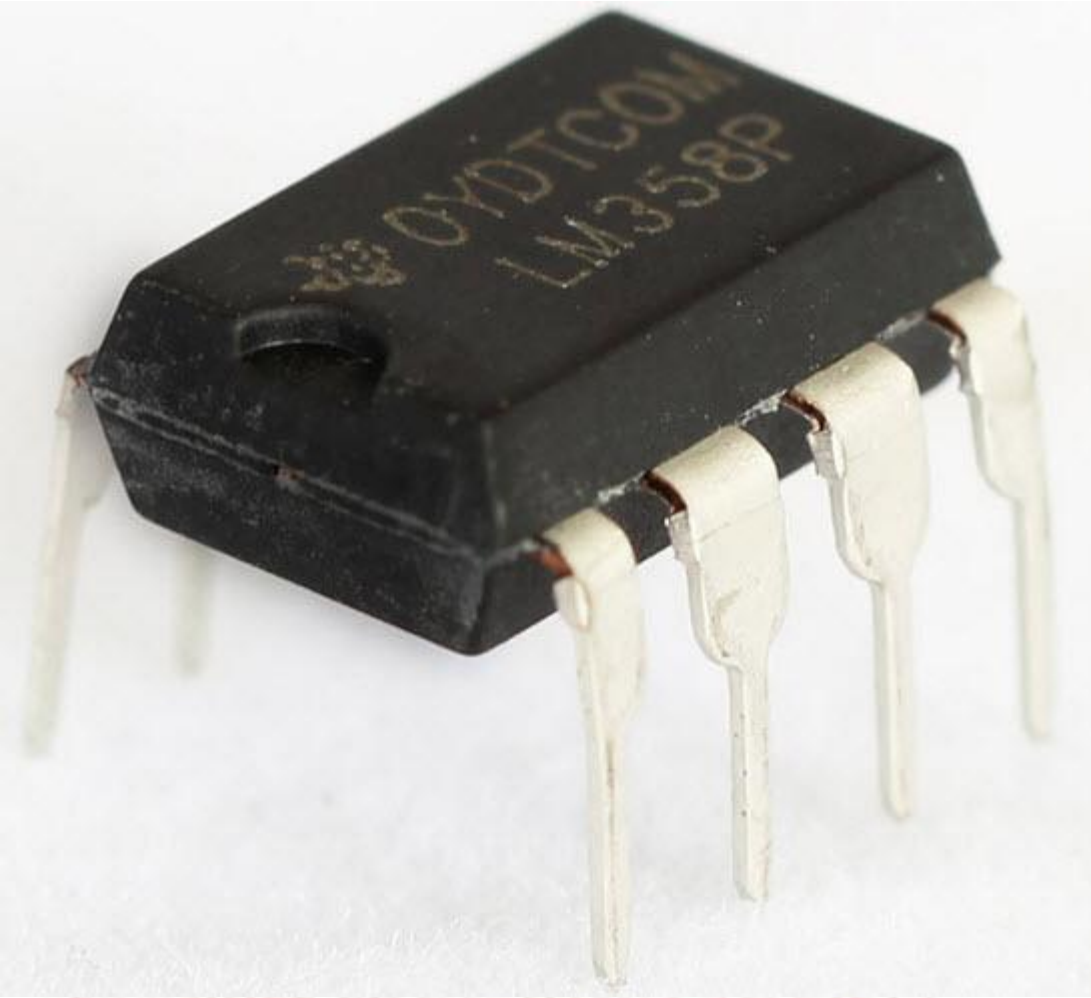

The LM358 IC is a great, low power and easy to use dual channel op-amp IC. It is designed and introduced by national semiconductor. It consists of two internally frequency compensated, high gain, independent op-amps. This IC is designed for specially to operate from a single power supply over a wide range of voltages. The LM358 IC is available in a chip sized package and applications of this op amp include conventional op-amp circuits, DC gain blocks and transducer amplifiers. LM358 IC is a good, standard operational amplifier and it is suitable for your needs. It can handle 3-32V DC supply & source up to 20mA per channel. This op-amp is apt, if you want to operate two separate op-amps for a single power supply. It's available in an 8-pin DIP package

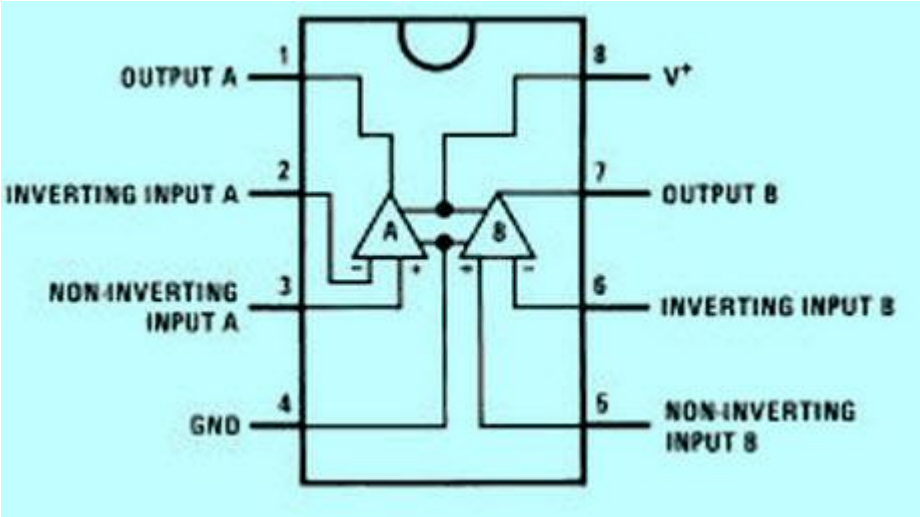

The pin diagram of LM358 IC comprises of 8 pins, where

- Pin-1 and pin-8 are o/p of the comparator
- Pin-2 and pin-6 are inverting i/ps
- Pin-3 and pin-5 are non inverting i/ps
- Pin-4 is GND terminal
- Pin-8 is VCC+

The features of the LM358 IC are

- It consists of two op-amps internally and frequency compensated for unity gain
- The large voltage gain is 100 dB
- Wide bandwidth is 1MHz
- Range of wide power supplies includes single and dual power supplies
- Range of Single power supply is from 3V to 32V
- Range of dual power supplies is from + or -1.5V to + or -16V
- The supply current drain is very low, i.e., 500 µA
- 2mV low i/p offset voltage
- Common mode i/p voltage range comprises ground
- The power supply voltage and differential i/p voltages are similar

- o/p voltage swing is large.

ESSARJEE EDUCATION SOCIETY

CHAPTER 4

Introduction:

In this chapter we will see mainly the circuit testing on bread-board and working of cell phone detector in brief. The first test with this cellular phone detector was to just have an active cellular phone in the room. So the cellular phone was turned on and a phone call was placed with the detector nearby. Absolutely nothing came out of the connected headphones. To troubleshoot this problem, the circuit was tested with a spectrum analyzer and signal generator. The antenna was connected to the signal generator at 900 MHz with 10dB of amplitude and the spectrum analyzer was connected to the headphone jack using the available probes (only 500 MHz was available). Injecting the 900 MHz signal into the antennas resulted in a lower amplitude signal on the output.

To test whether the circuit was resonating at 900MHz, a bandpass test was performed by stepping the frequency at 100 MHz intervals from 600 MHz to 1.2GHz. The amplitude changed at each interval, but was actually lower at 900 MHz than anywhere else and didn't have a bandpass response. The wire wrapped connections may have changed the impedance of the circuit.

While testing this cellular phone detector it was discovered that the spectrum analyzer was able to detect the cellular phone only using a 500 MHz probe. When talking on the cellular phone, the spectrum analyzer spiked at 832 MHz. This frequency range to design around for this cellular phone and is in the range of a GSM phones.

4.2 Circuit Testing on Bread-Board:

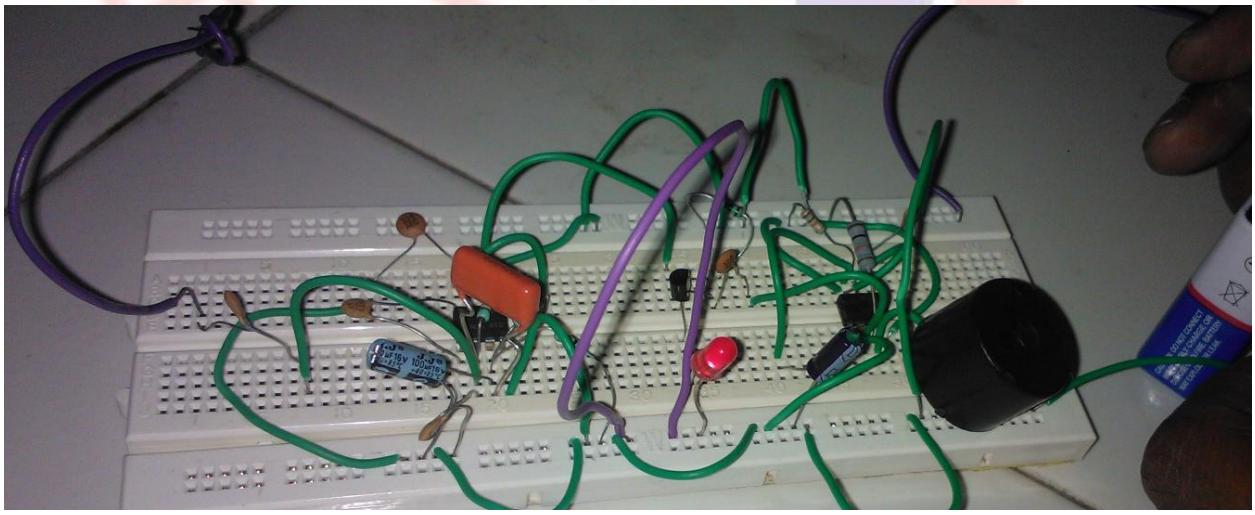

Figure 4.1: Circuit testing

Before the assembling of circuit on PCB we tested it on the bread-board using the components, connecting wires, and a 9V battery.

ESSARJEE EDUCATION SOCIETY

4.3 Working of Cell Phone Detector:

4.3.1 Purpose of the circuit:

This circuit is intended to detect unauthorized use of mobile phones in examination halls, confidential rooms etc. It also helps to detect unauthorized video and audio recordings. It detects the signal from mobile phones even if it is kept in the silent mode. It also detects SMS.

4.3.2 Concept:

Mobile phone uses RF with a wavelength of 30cm at 872 to 2170 MHz. That is the signal is high frequency with huge energy. When the mobile phone is active, it transmits the signal in the form of sine wave which passes through the space. The encoded audio/video signal contains electromagnetic radiation which is picked up by the receiver in the base station. Mobile phone system is referred to as “Cellular Telephone system” because the coverage area is divided into “cells” each of which has a base station. The transmitter power of the modern 2G antenna in the base station is 20-100 watts.

When a GSM (Global System of Mobile communication) digital phone is transmitting, the signal is time shared with 7 other users. That is at any one second, each of the 8 users on the same frequency is allotted 1/8 of the time and the signal is reconstituted by the receiver to form the speech. Peak power output of a mobile phone corresponds to 2 watts with an average of 250 milli watts of continuous power. Each handset with in a ‘cell’ is allotted a particular frequency for its use. The mobile phone transmits short signals at regular intervals to register its availability to the nearest base station. The network data base stores the information transmitted

by the mobile phone. If the mobile phone moves from one cell to another, it will keep the connection with the base station having strongest transmission. Mobile phone always tries to make connection with the available base station. That is why, the back light of the phone turns on intermittently while traveling. This will cause severe battery drain. So in long journeys, battery will flat with in a few hours.

AM Radio uses frequencies between 180 kHz and 1.6 MHz. FM radio uses 88 to 180 MHz. TV uses 470 to 854 MHz. Waves at higher frequencies but within the RF region is called Micro waves. Mobile phone uses high frequency RF wave in the micro wave region carrying huge amount of electromagnetic energy. That is why burning sensation develops in the ear if the mobile is used for a long period. Just like a micro wave oven, mobile phone is 'cooking' the tissues in the ear. RF radiation from the phone causes oscillation of polar molecules like water in the tissues. This generates heat through friction just like the principle of microwave oven. The strongest radiation from the mobile phone is about 2 watts which can make connection with a base station located 2 to 3 km away.

ESSARJEE EDUCATION SOCIETY

4.3.3 How the circuit works?

Ordinary LC (Coil-Capacitor) circuits are used to detect low frequency radiation in the AM and FM bands. The tuned tank circuit having a coil and a variable capacitor retrieve the signal from the carrier wave. But such LC circuits cannot detect high frequency waves near the microwave region. Hence in the circuit, a capacitor is used to detect RF from mobile phone considering that, a capacitor can store energy even from an outside source and oscillate like LC circuit.

4.3.4 Use of capacitor:

A capacitor has two electrodes separated by a 'dielectric' like paper, mica etc. The non polarized disc capacitor is used to pass AC and not DC. Capacitor can store

energy and pass AC signals during discharge. 0.22pF capacitor is selected because it is a low value one and has large surface area to accept energy from the mobile radiation. To detect the signal, the sensor part should be like an aerial. So the capacitor is arranged as a mini loop aerial (similar to the dipole antenna used in TV).In short with this arrangement, the capacitor works like an air core coil with ability to oscillate and discharge current.

4.3.5 How the capacitor senses RF?

One lead of the capacitor gets DC from the positive rail and the other lead goes to the negative input of IC1. So the capacitor gets energy for storage. This energy is applied to the inputs of IC1 so that the inputs of IC are almost balanced with 1.4 volts. In this state output is zero. But at any time IC can give a high output if a small current is induced to its inputs. There a natural electromagnetic field around the capacitor caused by the 50Hz from electrical wiring. When the mobile phone radiates high energy pulsations, capacitor oscillates and release energy in the inputs of IC. This oscillation is indicated by the flashing of the LED and beeping of Buzzer. In short, capacitor carries energy and is in an electromagnetic field. So a slight change in field caused by the RF from phone will disturb the field and forces the capacitor to release energy.

CHAPTER 5

5.1 Introduction:

In this chapter we will see applications, advantages, limitation, future scope, and the conclusions of cell phone detector. Basically this circuit can be used anywhere for detecting the cell phones. Since today is the generation of advanced communication devices and cell phone is the very first need of this. But somehow reasons there is a misuse of these devices. So we have to stop this for our safety. And by using cell phone detectors we can do this very simply. We can use cell phone detector even at our working place, confidential halls, prisons, court room and at many other places where cell phone is not allowed.

But there is a limitation of this device that it can detect only in the range of 1.5-2 meters. So we have to place a number of detectors in a large room. But beyond of this we can simply detect the cells in a range which can covered by the detector.

In future we will increase the range of the detector so that we can detect the cells over a hundreds of meter. So this is the first step to avoid the unwanted activities using the cell phones.

ESSARJEE EDUCATION SOCIETY

5.1 Applications:

(i) Colleges and Universities:

During tests and exams the use of mobile phones is prohibited, for the students could use it to send answers among each other.

By using a GSM-detector this kind of fraud is prohibited. The presence of a GSM-detector can work in a preventing way, because when a GSM-detector is present, the use of mobile phones does not stay unnoticed.

(ii) Cinemas:

In a cinema the use of a mobile phone is undesired. Being called by someone during a movie is of course very bothering for other people.

With a GSM-detector the use of mobile phones is detected, so the visitor can be informed that this is not allowed.

(iii) Theatres:

Just like with a cinema, in theatres the use of mobile phones is not allowed. The gsm-detector can be used to prevent use.

(iv) Restaurants / Hotels:

In hotels and restaurants it is often undesired that a mobile phone is used at the table or in other areas. A GSM-detector can be installed in these areas to notify guests.

(v) Petrol stations:

When tanking at a petrol station, the use of mobile phones is prohibited, because the mobile signals can interfere with the tanking equipment and because a small spark within the mobile phone could set fire to possible gasoline vapour. With the GSM-detector this prohibition is pointed out to the tanking customer.

(vi) Airplanes:

In airplanes the use of mobile phones is prohibited, for it could interfere with the equipment in the airplane. All the while phones are still used illegally, especially in restrooms. By installing a GSM-detector there, this can be prevented.

(vii) Conference rooms:

It is often distracting to be called during a meeting. Also, confidential conversation could be overheard by using cell phones, especially by those with a spy function (when someone calls that phone it automatically is picked up without ringing, so that the person on the other end of the line can hear conversations in the room where the spy phone is placed).

By using a GSM-detector you can be assured that this is not the case.

(viii) Hospitals:

The signals emitted by mobile phones can interfere with some electronic equipment inside the hospital. This could have fatal consequences.

The GSM-detector can be placed in any area where the use of mobile phones could interfere with sensitive devices. The audio alarm will sound when a phone is used and this way, the person should immediately switch off his/her phone

(ix) Prisons:

In prisons the use of mobile phones is not allowed. It could occur anyway. By using the gsm-detector the staff can be notified when a mobile phone is used inside the facility.

ESSARJEE EDUCATION SOCIETY

(x) Power plants:

Power plants contain -just like hospitals- a lot of electronic devices that are sensitive for interference by mobile phones. Therefore, it is prohibited to use mobile phones there. Use a GSM-detector to inspect this.

5.2 Advantages:

Our mission is to be the leading provider of cellular phone detection capabilities to both business and government institutions around the world. We are

striving to bring a national debate to the growing proliferation of cell phone use in our society today. Using our state of the art products we are hoping to provide individuals and businesses the tools to detect and prevent the use of cell phone in sensitive areas.

This product was created in reaction to the growing use of cell phones around the world, and how that use was beginning to interfere with our daily lives. When businesses tried to find solutions to problems involving cell phones, they found a huge shortcoming in products and services.

Hence, our solution was created to supply this need. To date we have sold thousands of products to a very wide audience of businesses and government institutions. Many of these include prisons, casinos, embassies, classrooms and testing facilities, oil rigs, conferences, golf clubhouses, computer-rooms, data centers, hospitals, and restaurants, to name just a small few of the vast capabilities of our product.

.

5.3 Limitation:

Range of the circuit:

The prototype version has only limited range of 2 meters. But if a preamplifier stage using JFET or MOSFET transistor is used as an interface between the capacitor and IC, range can be increased.

5.4 Future scope:

Trying to increase the detecting range of mobile bug to few more meters for observing wide ranges of area. In the future time this detector will be improved in all ways.

In future we could be able to detect any range of frequency over a meters of range and this will be very useful to detect the cell phones where the cell phones are prohibited.

ESSARJEE EDUCATION SOCIETY

5.5 Conclusion:

This pocket-size mobile transmission detector or sniffer can sense the presence of an activated mobile cellphone from a distance of one and-a-half meters. So it can be used to prevent use of mobile phones in examination halls, confidential rooms, etc. It is also useful for detecting the use of mobile phone for spying and unauthorised video transmission.

In this project we made an attempt to design a mobile detector which can detect both the incoming and outgoing calls as well as video transmission even if the mobile is kept at the silent mode. Our circuit has detected the presence of an active mobile phone even at a distance of about one and half a meter. It gave the

indication of an active mobile phone by glowing the LED, according to the receiving frequency and by buzzing the sound of the buzzer. The alarm continues until the signal is ceases.

ESSARJEE EDUCATION SOCIETY

5.6 References:

(i) www.google.com

(ii) www.wikipedia.org

(iii) www.pdfmachine.com