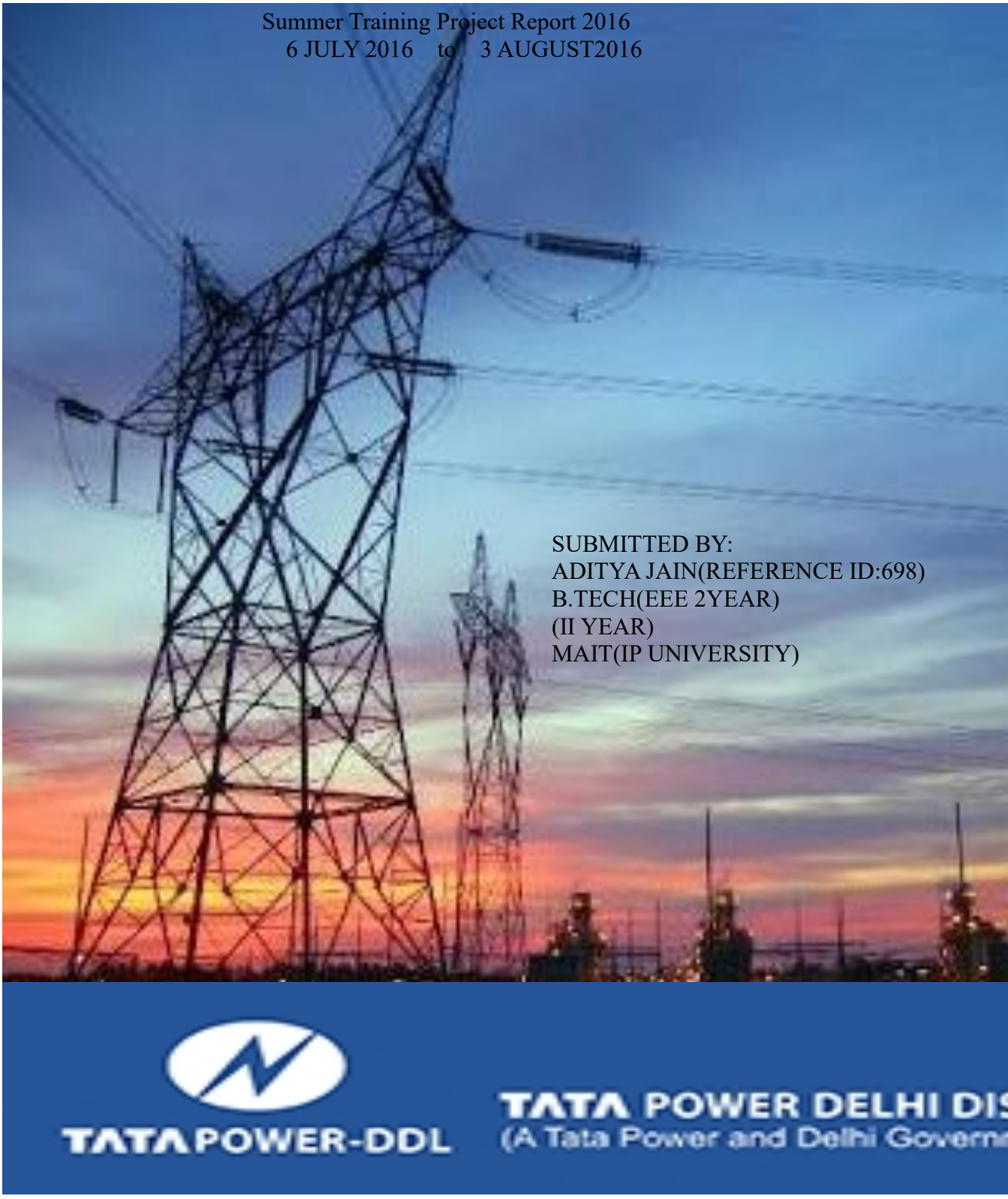

PROJECT:METER MANAGEMENT STRUCTURE

INDEX

ACKNOWLEDGEMENT

I,ADITYA JAIN STUDENT OF IP UNIVERSITY IS HIGHLY OBLIGED TO MY MENTOR SHRI SUDESH KUMAR SHARMA AND SHRI SANJAY KUNDU FOR GUIDING ME TO MAKE THE PROJECT. THIER GUIDANCE HELPED ME A LOT AND I AM VERY THANKFUL TO THEM.

ABOUT TPDDL(TATA POWER DELHI DISTRIBUTION LIMITED)

1. TATA POWER -DD Limited is a joint venture between TATA Power and the Government of NCT of Delhi.

2.TATA Power-DDL distributes electricity in North & North West parts of Delhi and serves a populace of 7 million.

3.TATA Power-DDL has been the in implementing power distribution reforms in the capital city and is acknowledged for its consumer friendly practices.

4.The company has implemented high-tech automated systems for its entire distribution network.

With a registered consumer base of 1.52 million and a peak load of around 1764 MW (May 2016), the company's operations span across an area of 510 sq.

5.TATA Power Delhi Distribution Limited has won several accolades for its pioneering efforts in transforming the power distribution scene in its licensed area both at the national and state level.

INTRODUCTION

An electricity meter is a device that measures the amount of electric energy consumed by a residence, a business, or an electrically powered device.electric utilities use electric meters installed at customers' premises to measure electric energy delivered to their customers for billing purposes. They are typically calibrated in billing units, the most common one being the kilowatt hour [kWh]. They are usually read once each billing period.

When energy savings during certain periods are desired, some meters may measure demand, the maximum use of power in some interval. "Time of day" metering allows electric rates to be changed during a day, to record usage during peak high-cost periods and off-peak, lower-cost, periods. Also, in some areas it does not effect.

TYPES OF METERS

1.Electronic Energy meters

These are of accurate, high procession and reliable types of measuring instruments as compared to conventional mechanical meters. It consumes less power and starts measuring instantaneously when connected to load. These meters might be analog or digital. In analog meters, power is converted to proportional frequency or pulse rate and it is integrated by counters placed inside it. In digital electric meter power is directly measured by high end processor. The power integrated by logic circuits to get the energy and also for testing and calibration purpose. It is then converted to frequency or pulse rate.

2.Digital Electronic Energy Meters

Digital signal processor or high performance microprocessors are used in digital electric meters. Similar to the analog meters, voltage and current transducers are connected to a high resolution ADC. Once it converts analog signals to digital samples, voltage and current samples are multiplied and integrated by digital circuits to measure the energy consumed.

Microprocessor also calculates phase angle between voltage and current, so that it also measures and indicates reactive power. It is programmed in such a way that it calculates energy according to the tariff and other parameters like power factor, maximum demand, etc and stores all these values in a non volatile memory EEPROM.
It contains real time clock (RTC) for calculating time for power integration, maximum demand calculations and also date and time stamps for particular parameters. Furthermore it interacts with liquid crystal display (LCD), communication devices and other meter outputs.

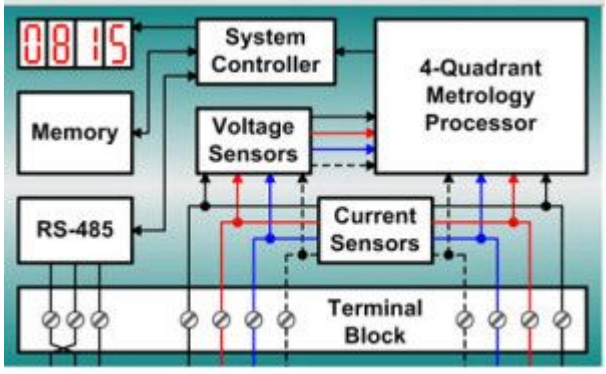

3. Smart Energy Meters.

It is an advanced metering technology involving placing intelligent meters to read, process and feedback the data to customers. It measures energy consumption, remotely switches the supply to customers and remotely controls the maximum electricity consumption. Smart metering system uses the advanced metering infrastructure system technology for better performance.These are capable of communicating in both directions. They can transmit the data to the utilities like energy consumption, parameter values, alarms, etc and also can receive information from utilities such as automatic meter reading system, reconnect/disconnect instructions, upgrading of meter software's and other important messages. These meters reduce the need to visit while taking or reading monthly bill. Modems are used in these smart meters to facilitate communication systems such as telephone, wireless, fiber cable, power line communications. Another advantage of smart metering is complete avoidance of tampering of energy meter where there is scope of using power in an illegal way.

3.FEATURES OF ENERGY METER

• Integrated board for measurement display and communication • Internal and display resolution of one watt-hour • Power outage and restore notification • Customer voltage Alarm reporting • kWh, energy measurements • Full net metering • Demand reading options include block, sliding, peak, and cumulative demand • Up to four channels of load profile • Up to eight seasons of time-of-use in up to seven tiers of data • Remote disconnect with enhanced Load Limiting functionality • Over-The-Air (OTA) remote radio and meter firmware download functionality • with PKI authentication • IP addressable through • Extensive meter event logging • Accuracy exceeds ANSI C12.20 (Class 0.2) A

Advanced Technology • Superior accuracy • Reliable, integrated construction • Complete DC immunity

FEATURES AND BENEFITS • User definable daily read intervals • On demand meter readings and status reports • Meter tamper detection • Flexible two-way communication via communications network • Over-the-air (OTA) remote radio and meter configuration capabilities • communications network supports multiple applications in addition to electric AMI, such as distribution automation, water and gas meters • communications network is FCC approved for operation on an primary-use licensed spectrum.

4.PARAMETERS ON ENERGY METER

1.0 SCOPE a) This specification covers design, engineering, manufacture, testing, inspection & supply of A.C. Single phase, two wire solid state (static) fully electronic energy meters of accuracy class 1.0 & current rating 10-60 A, with LCD display for 240 Volt systems as per requirement in this specification and pilfer proof meter box (PPMB) made of engineering plastic, FR grade with self extinguishing property suitable for single phase meter. The meter should be capable of recording & displaying energy in KWH & demand in KW for single phase two wire A.C. loads respectively for power factor range of Zero lag – unity – Zero lead. Meters should have facility/ capability of recording tamper information.

2.SUPPLY SYSTEM System 1 Phase 2 Wire Rated voltage 240 V – Phase to Neutral Rated Current Basic current 10 Amps (Ib), Maximum current 60 Amps Rated Frequency 50 Hz.

ACCURACY Class of accuracy of the meter should be 1.0. The accuracy should not drift with time. Maximum error limit at 1% , UPF should preferably be within +/- 1. For voltage variation use of "between 70% to 50%" of .allowable error limit is +/- 4%.

DISPLAY The measured value(s) should be displayed on a Liquid Crystal display (LCD) register. The height X width of the digit should be minimum 8.0 X 5 mm. The energy registration should take place with 6 complete digits. The display should have capability for easy reading. When the LCD is placed at a constant temperature of 65 deg C for a period of 30 minutes in operating condition and 80 deg C for 30 Under energized / storage condition, it should not get deformed. The LCD should be of TN (Twisted Pneumatic) type with display size area of at least 40 X 15 mm. The display should have wide viewing angle of at least 70 deg. Dot Matrix type LCD will not be acceptable. Display should have viewing angle 35 degree up & down from eye level.

DISPLAY SEQUENCE The meter should display the required parameters in two different modes as per the sequence given

below. A) Auto Display Mode : The following parameters hereinafter referred to as "Billing Parameters" (B.P) Push Button Mode : In addition to the auto display mode parameters, the following parameters should be displayed on pressing the push button (All displays of auto mode and the following) : 1. Last Bill Active Forward energy 2. Instantaneous Load (KW) 3. Instantaneous voltage, current 4. Maximum demand kW for Current month 5. Supply Frequency 6. TOD Energy 7. Instantaneous Power Factor 8. Tamper Count 9. Meter No. The meter should also be capable of offering a high resolution display which should enable be displayed.

7 Segment Display

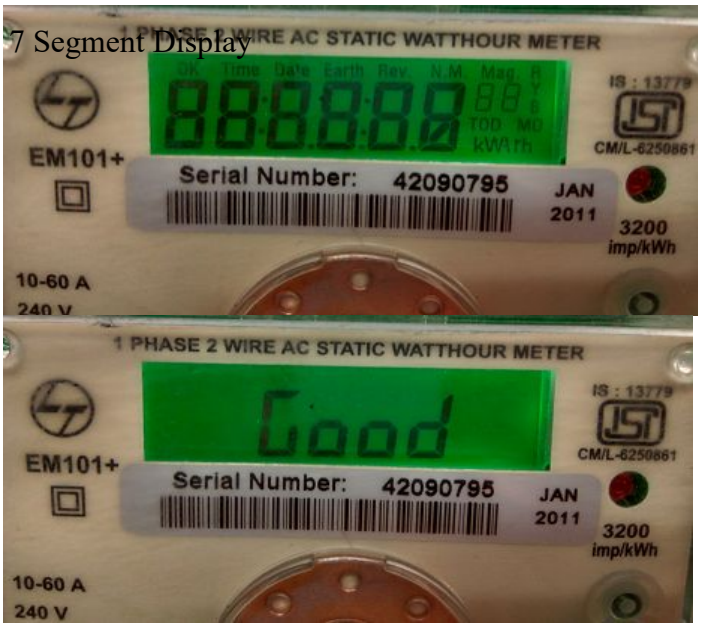

kWh

TESTING OF ENERGY METERS

Type Testing of Meter : The offered meters should be type tested at any NABL accredited laboratory in accordance with IS 13779 with latest amendments, CBIP Report 304 with latest amendments. The type test report should not be more than 3 (three) years old. A copy of the Type Test results should be enclosed with the offer. If there is any modification in the design/parameters of the specifications or use of constituent materials in the offered meters submitted with the offer, from the meter which was submitted type tested, which may affect the characteristics as well as parameters of the meter, revised type test certificates as per the design, parameters and constituent material used in the offered meter, shall have to be submitted failing which the offer may be liable to be rejected. Type Test Certificate from any NABL accredited Lab. shall only be considered. Type test certificate should contain the following information clearly.

1) **Class of accuracy. 2) Meter constant**

4.1 TESTING OF METER IN TERMS OF ACCURACY

Electricity meters are required to register the energy consumed within an acceptable degree of accuracy. Any significant error in the registered energy can represent a loss

to the electricity supplier, or the consumer being over billed. The accuracy is generally laid down in statute for the location in which the meter is installed. Statutory provisions should also specify a procedure to be followed should the accuracy be disputed.

In DELHI , any installed electricity meter is required to accurately record the consumed energy, but it is permitted to over-read by 2.5%.Disputed meters are initially verified with a check meter operating alongside the disputed meter. The final resort is for the disputed meter to be fully tested both in the installed location and at a specialist calibration laboratory.Approximately 93% of disputed meters are found to be operating satisfactorily. A refund of electricity paid for, but not consumed will only be made if the laboratory are able to estimate how long the meter has been This contrasts with gas meters where if a meter is found to be under reading, it is assumed that it has under read for as long as the consumer has had a gas supply through it.

4.2 TESTING BY PHANTOM LOADING

Meters can be manipulated to make them under-register, effectively allowing power use without paying for it. This theft or fraud can be dangerous as well as dishonest.

Power companies often install remote-reporting meters specifically to enable remote detection of tampering, and specifically to discover energy theft. The change to smart power meters is useful to stop energy theft.

When tampering is detected, the normal tactic, legal in most areas of the DELHI, is to switch the subscriber to a "tampering" tariff charged at the meter's maximum designed current. At RS 4kWh,for first 200 units then after 200 units above that to 400 it is RS 5.95/KWH then UPTO 600 unit it is 7.30/KWH and then 800 units it is RS7.90/KWH.

.The owner of the meter normally secures the meter against tampering. Revenue meters' mechanisms and connections are sealed. Meters may also measure VAR-hours (the reflected load), neutral and DC currents (elevated by most electrical tampering), ambient magnetic fields, etc. .

Newer computer meters usually have counter-measures against tampering. AMR (Automated Meter Reading) meters often have sensors that can report opening of the meter cover, magnetic anomalies, extra clock setting, glued buttons, inverted installation, reversed or switched phases etc.

Some tampers bypass the meter, wholly or in part. Safe tampers of this type normally increase the neutral current at the meter. Most split-phase residential meters. However, modern tamper-resistant meters can detect and bill it at standard rates.

Disconnecting a meter's neutral connector is unsafe because shorts can then pass through people or equipment rather than a metallic ground to the generator or earth

A phantom loop connection via an earth ground is often much higher resistance than the metallic neutral connector. Even if an earth ground is safe, metering at the substation can alert the operator to tampering. Substations, inter-ties, and transformers normally have a high-accuracy meter for the area served. Power companies normally investigate discrepancies between the total billed and the total generated, in order to find and fix power distribution problems. These investigations are an effective method to discover tampering

4.3 TESTING BY USING CT(ACCUCHECK)

Accuracy check is a device having current transformer in it which tell us about the various parameters like power factor,voltage,current and most importantly it tells about the accuracy of the meter which the tells the status of the meter if it is fine or not.

ACTARIS Testing Bench: (IS Standard Testing)

Warm-up Test:

Starting Current Test:

No-Load Test:

Limits of Error Test:

5.COMMUNICATION IN ENERGY METERS

Some meters have an or IR LED output that give 32-100 ms pulses for each metered amount of electrical energy, usually 1000-10000 pulses per Output is limited to max 27 V DC and 27 ma DC. These outputs usually follow the DIN 43864 standard.

Often, meters designed for semi-automated reading have a on that communicates by LED through the of the meter. In some unit buildings, a similar protocol is used, but in a wired bus using a to connect all the meters to a single plug.

One protocol proposed for this purpose is DLMS/COSEM which can operate over any medium, including serial ports. The data can be transmitted by Zigbee, WiFi, telephone lines or over the power lines themselves. Some meters can be read over the internet. Other more modern protocols are also becoming widely used, like OSGP (Open Smart Grid)

Electronic meters now use low-power radio, GSM, GPRS, Bluetooth, IrDA, as well as RS-485 wired link. The meters can now store the entire usage profiles with time stamps and relay them at a click of a button. The demand readings stored with the profiles accurately indicate the load requirements of the customer. This load profile data is processed at the utilities for billing and planning purposes.

AMR (Automatic Meter Reading) and RMR (Remote Meter Reading) describe various systems that allow meters to be checked without the need to send a meter reader out. An

electronic meter can transmit its readings by telephone line or radio to a central billing office. Automatic meter reading can be done with GSM (Global System for Mobile Communications) modems, one is attached to each meter and the other is placed at the central utility office.

6.PREPAID METERS

The standard business model of electricity retailing involves the electricity company billing the customer for the amount of energy used in the previous month or quarter. This requires the customer to make advance payment before electricity can be used.If the available credit is exhausted then the supply of electricity is cut off by a relay.

Modern solid-state electricity meters, in conjunction with smart cards, have removed these disadvantages and such meters are commonly used for customers considered to be a poor credit risk.

Around the world, experiments are going on, especially in developing countries, to test prepayment systems. In some cases, prepayment meters have not been accepted by customers. There are various groups, such as the Standard Transfer Specification (STS) association, which promote common standards for prepayment metering systems across manufacturers. Prepaid meters using the STS standard are used in many countries.Time of Day metering (TOD), also known as Time of Usage (TOU) or Seasonal Time of Day , metering involves dividing the day, month and year into tariff slots and with higher rates at peak load periods and low tariff rates at off-peak load periods..

TOD metering normally splits rates into an arrangement of multiple segments including on-peak, off-peak, mid-peak or shoulder, and critical peak. A typical arrangement is a peak occurring during the day (non-holiday days only), such as from 1 pm to 9 pm Monday through Friday during the summer and from 6:30 am to 12 noon and 5 pm to 9 pm during the winter. More complex arrangements include the use of critical peaks which occur during high demand periods. The times of

peak demand/cost will vary in different markets around the world.

PREPAID METERS

7.NET METERS

Net metering (or net energy metering, NEM) allows consumers who generate some or all of their own electricity to use that electricity anytime, instead of when it is generated. This is particularly important with wind and solar, which are non-dispatchable. Monthly net metering allows consumers to use solar power generated during the day at night, or wind from a windy day later in the month. Annual net metering rolls over a net kilowatt credit to the following month, allowing solar power that was generated in July to be used in December, or wind power from March in August.

Net metering is an enabling policy designed to foster private investment in renewable energy.

NET METER

8.DISTRIBUTION NETWORKS

The transition from transmission to distribution happens in a power substation, which has the following functions:

- **Circuit breakers and switches enable the substation to be disconnected from the transmission grid or for distribution lines to be disconnected.**
- **Transformers step down transmission voltages, 35kV or more, down to primary distribution voltages. These are medium voltage circuits, usually 600-35,000 V.**

- **From the transformer, power goes to the busbar that can split the distribution power off in multiple directions. The bus distributes power to distribution lines, which fan out to customers.**

Distribution

Primary distribution voltages are 22kV or 11 Only large consumers are fed directly from distribution voltages; most utility customers are connected to a transformer, which reduces the distribution voltage to the low voltage using low voltages and interior wiring systems.

BARE CONDUCTOR

LT ABC

HVDS

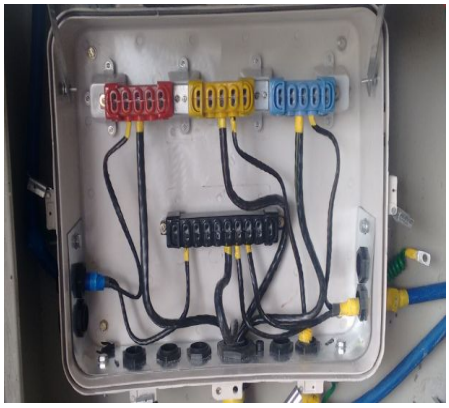

BUS BAR BOX

9.METER INSTALLATION PRACTICES

A series of formalities and inspections are carried out before and after installation of a meter.Some responsibilities include as-

A)Inspection of Site:
B)Technical Formalities
C)Condition of Network

D)Pole Selection
E)Consumer Interaction
F)Commercial Formalities
G)Meter Box Installation
H)Fixing Meter into Meter Box
I)Cable Routing
J)Proper Saddling
K)Earthing (Box End/Source End)

10.SAFETY AND QUALITY MEASURES

TPDDL emphasis on safety for their employees.

It promotes and provides safety apparatus for all people working on live lines.

All line me are provided by (Personal Protection Equipment).

SAFETY EQUIPMENTS

1.WISER **3.GLOVES** **5.ROPE**
2.SAFETY HARNESS **4.SHOES** **6.HELMET**

11.BUS BAR AND DISTRIBUTION BOX

In electrical power distribution, a bus bar is a metallic strip or bar (typically copper, brass oraluminium) that conducts electricity within a switchboard, distribution board, substation, battery bank, or other electrical apparatus. Its main purpose is to conduct a substantial current of electricity, and not to function as a structural member. Bus bars may or may not be enclosed in a bus duct. Also, bus bars are important components in electrical power grid because they can reduce the power loss via reducing the corona effects. This is because bus bars have bigger surface areas compared to wires.

The material composition and cross-sectional size of the bus bar determine the maximum amount of current that can be safely carried. Bus bars can have a cross-sectional area of as little as 10 square (0.016 sq in), but electrical substations may use metal tubes 50 (2.0 in) in diameter (20 square (0.031 sq in)) or more as bus bars. An aluminium smelter will have very large bus bars used to carry tens of thousands of amperes to the electrochemical cells that produce aluminium from molten salts.

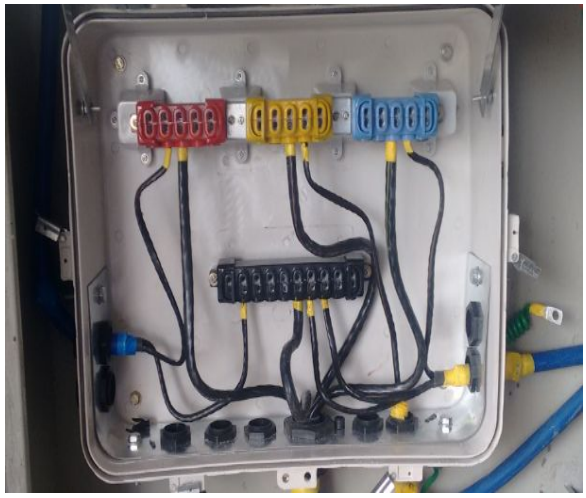

BUS BAR BOX

12.FIELD FORCE AUTOMATION

Field force automation (FFA) is the capture of field sales or service information in real time using communications technology, typically hand held PDAs, wireless devices, tablet PCs or mobile phones. The captured data is transferred immediately to back-end systems (ERP, CRM or accounting systems) through wireless connectivity (3G, satellite or GPRS). This instant capture of information reduces time delays, avoids manual double entry data errors and enhances field force productivity.

From an operations perspective, availability of field information in near real time allows a business to plan delivery schedules, reduce inventory and monitor and control the field workers. Field force automation is seen as beneficial to businesses in regard of customer relations, maintaining skills among the field workforce, and limiting the size of this workforce.

The biggest challenge in field force automation is in developing a simple, but usable, user interface for the hand held device or mobile, and connectivity at the location ofinformation capture. Connectivity can be overcome by having a system which can retain the information captured in the device cache and later synchronize with back-end systems ("thick client").

CONCLUSION

Critical and Thinking:
To organize our tasks and assignment, we need to govern our problems and assignment, and to formulate a good solution to the problem. We would have to set contingency plan for the solution, so that we are well prepared for the unforeseeable situations.

Time Management:
As overall technicians are always racing against tight and packed schedule, a proper time management will minimize facing overdue complaints. An effective time management allows us to do our assignment efficiently and meet our schedules. Scheduling avoids time wastage and allows us to plan ahead, and gaining more as a result.

Goal Management:
Opposed to a bigger goal seemed to be reachable at first sight, it is better to sub-divide the goals to a few achievable tasks, so that we will be gaining more confidence by accomplishing those tasks.

Colleague Interaction:
In a working environment, teamwork is vital in contributing to a strong organization. Teamwork is also essential in reaching the goals of the organization as an entity. Thus, communicating and sharing is much needed in the working environment. Therefore, we should be respecting each other in work, and working together as a team, instead of working alone. This is because working together as a team helps in reaching our targets with ease, rather than operating individually.

END NOTES

In review this internship has been an excellent and rewarding experience.

I have been able to meet and work with so many people that have provided me knowledge and understanding of how this company works.

We learn about the safety and quality measures that are followed throughout the company.