BLIND STICK USING ULTRASONIC SENSOR

PROJECT REPORT(EC-882)

ELECTRONICS AND COMMUNICATION ENGINEERING

157/f,nilgunj road,panihati,Sodepur,Kolkata,WB,700114

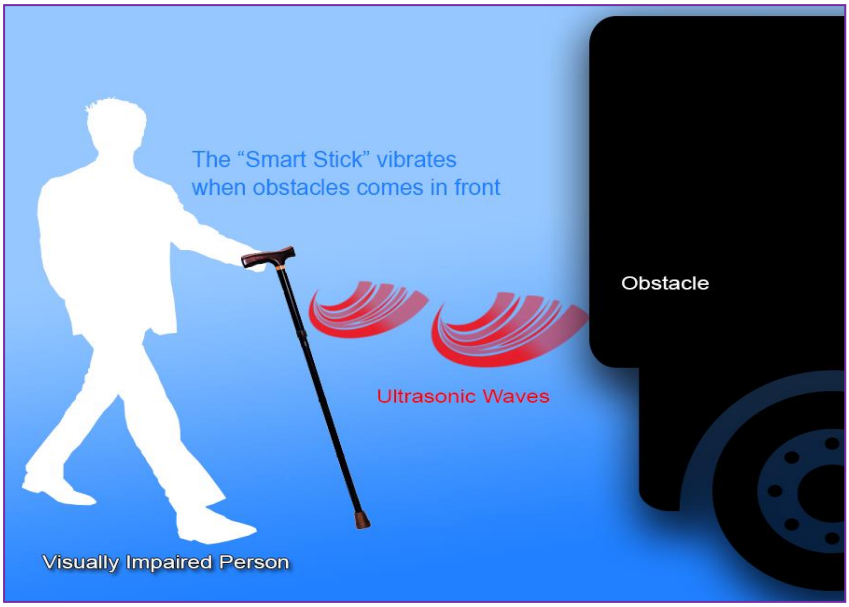

Group Members:-

Apala Mishra(13)

Arpita Mondal(18)

Arup Kumar Bhunia(20)

Asim Garai(22)

SESSION:2013-2017

Guided by:-

Mrs. Anurima Majumdar

GURUNANAK INSTITUTE OF TECHNOLOGY

CERTIFICATE

This is to certify that the project report entitled **BLINDSTICK USING ULTRASONIC SENSOR** submitted by **ARUP KUMAR BHUNIA,ARPITA MONDAL,ASIM GARAI,APALA MISHRA** to the Gurunanak Institute of Technology,Panihati,Kolkata,West Bengal during the year of 2017 in partial fulfilment for the award of the degree of **B.Tech in ELECTRONICS AND COMMUNICATION ENGINEERING** is a bonafide record of project work carried out by him/her under my/our supervision. The contents of this project,in full or in parts,have not been submitted to any other institution or University for the award of any degree or diploma.

.....	.....
Prof. ANURIMA MAZUMDAR	Dr. Sunipa Roy
Project Guide	H.O.D
Department of ECE	Department of ECE
GNIT	GNIT

DECLARATION

I declare that this written submission represents my ideas in my own words and where others' ideas or words have been included, I have adequately cited and referenced the original sources. I also declare that I have adhered to all principals of academic honesty and integrity and have not misrepresented or fabricated or falsified any idea/data/fact/source/ in my submission. I understand that any violation of the above will be cause for discipilinary action by the institute and can also evoke penal action from the sources which have thus not been properly cited or from whom proper permission has not been taken when needed.

(SIGNATURE)

(NAME OF STUDENT)

(ROLL NO.)

DATE:----------

APPROVAL SHEET

This project entitled(**Blind Stick Using Ultrasonic Sensor**) by (Arup Kumar Bhunia,Arpita Mondal,Asim Garai,Apala Mishra) is approved for the degree of **B.Tech in ELECTRONICS AND COMMUNICATION ENGINEERING.**

GUIDE

_____

_____

_____

H.O.D

_____

_____

_____

ACKNOWLEDGEMENT

I have taken my efforts to complete this project. However, it would be impossible for me to complete this project without the encouragement and support from certain people. Hence,here I would like to give my sincere thanks to all of them.

First of all, I would like to thank our supervisor, **Mrs. Anurima Majumdar** for providing knowledge and constant supervision throughout the project. Her guidance, motivation and advising on the project has helped me complete the project.

Lastly, I would like thank my team members for sharing their knowledge with me while doing the project. Their advice has helped me to solve the problems faced in the project.

Arup Kumar Bhunia	Arpita Mondal
Asim Garai	Apala Mishra

CONTENTS

ABSTRACT

Blind people consist of a large group of people in our society. Losing their eyesight has caused them inconvenience in performing daily tasks. Hence, smart blind stick had been developed in order to increase the life quality of a blind person. The purpose of this project is to design a smart blind stick with ultrasonic sensor and for the blind. This embedded system mainly has mobility system. For mobility system, it is equipped with ultrasonic sensor, HC-SR04 and vibrating motor and a buzzer. Ultrasonic sensor will send the trigger pulse to detect obstacles. When an obstacle is detected, signals will be sent to vibrating motor and buzzer and activate it. The vibrating motor will vibrate with different strengths according to the distance of the obstacle. The microcontroller used in this embedded system is Arduino UNO. The prototype of smart cane was built to increase the mobility of the blind people. In this project, sensors plays key role to detect the objects in all directions to make free to walk for the blind people.

INTRODUCTION

Blindness is a state of lacking the visual perception due to physiological or neurological factors. The partial blindness represents the lack of integration in the growth of the optic nerve or visual centre of the eye, and total blindness is the full absence of the visual light perception. In this work, a simple, cheap, friendly user, smart blind guidance system is designed and implemented to improve the mobility of both blind and visually impaired people in a specific area.

The proposed work includes a wearable equipment consists of light weight blind stick and sensor based obstacle detection circuit is developed to help the blind person to navigate alone safely and to avoid any obstacles that may be encountered, whether fixed or mobile, to prevent any possible accident.

The main component of this system is the ultrasonic sensor which is used to scan a predetermined area around blind by emitting-reflecting waves. The reflected signals received from the barrier objects are used as inputs to microcontroller. The microcontroller is then used to determine the direction and distance of the objects around the blind.

LITERATURE SURVEY

S.Gangwar (2011) designed a smart stick for blind which can give early warning of an obstacle using Infrared (IR) sensors. After identifying the obstacles, the stick alerts the visually impaired people using vibration signals. However the smart stick focused only for obstacle detection but it is not assisting for emergency purposes needed by the blind. And also the IR sensors are not really efficient enough because it can detect only the nearest obstacle in short distance.

S.Chew (2012) proposed the smart white cane, called Blindspot that combines GPS technology, social networking and ultrasonic sensors to help visually impaired people to navigate public spaces.The GPS detects the location of the obstacle and alerts the blind to avoid them hitting the obstacle using ultra-sonic sensors. But GPS did not show the efficiency in tracing the location of the obstacles since ultra-sonic tells the distance of the obstacle.

Benjamin etal (2011) had developed a smart stick using laser sensors to detect the obstacles and down curbs Obstacle detection was signalized by a high pitch “BEEP” using a microphone. The design of the laser cane is very simple and intuitive.The stick can only detects obstacle, but can not provide cognitive and psychological support. There exists only beep sound that triggers any obstacle and there is no any assistance to direct them.

Central Michigan University (2009) developed an electronic cane for blind people that would provide contextual information on the environment around the user. They used RFID chips which are implanted into street signs, store fronts, similar locations, and the cane reads those and feeds the information back to the user . The device also features an ultrasound sensor to help to detect objects ahead of the cane tip.The Smart Cane, which has an ultrasonic sensor mounted on it, is paired with a messenger style bag that is

worn across the shoulder.A speaker located on the bag strap voice alerts when an obstacle is detected and also directs the user to move in different direction.

Mohd Helmyabd Wahab and Amirul A. Talibetal (2011) developed a cane could communicate with users through voice alert and vibration signal. Ultrasonic sensors are used to detect obstacle in front, since ultrasonic sensors are good in detecting obstacle in few meters range and this information will be sent in the form of voice signal. This voice signal is send via speaker to the user. Here blind people might find it difficult in travelling without any emergency alert rather than having only ultrasonic sensors.

Alejandro R. Garcia Ramirez and Renato Fonseca Livramento da Silvaetal (2012) designed an assistive technology device called the electronic long cane to serve as a mobility aid for blind and visually impaired people .The author implements the cane with an ergonomic design and an embedded electronic system, which fits inside the handle of a traditional long cane. The system was designed using haptic sensors to detect obstacles above the waistline. It works in such a way when an obstacle is detected; the cane vibrates or makes a sound. However this system only detects obstacle above the waistline.

Shruti Dambhare and A.Sakhare (2011) designed an artificial vision and object detection withreal-time assistance via GPS to provide a low cost and efficient navigation aid for blind which gives a sense of artificial vision by providing information about the environmental scenario of static and dynamic objects around them.

BACKGROUND STUDY

About 285 million **people** are **visually impaired** worldwide: 39 million are **blind** and 246 million have low vision (severe or moderate visual impairment) 4 out of 5 **blind** or **visually impaired people** are avoidably so preventable cause are as high as 80% of the **total** global visual impairment burden.

Total blindness is the condition when there is completely no light perception and for blindness that have light perception, they can only sense light but unable to have sight vision. The most common diseases that bring to blindness are cataracts, retinal diseases, uncorrected refractive errors, corneal diseases and glaucoma.

Blind people are able to move independently after they are trained with tools. Professionals such as orientation and mobility specialists are able to help blind people to move safely, independently and confidently. Tools that are commonly used by blind people are white cane and guide dogs. Blind people swing the white cane around their feet to detect the existence of an obstacle around their step. A guide dog is trained to help their master to avoid all the obstacles and it is able to guide their master to go up and down the staircase.

PROBLEM STATEMENT

Traditional white cane lacks of intelligent technology to improve the living standard of blind people. Blind people need to be trained by specialists in order to use a white cane to perform their daily tasks.

White cane can only sense an obstacle up to 1 meter. It is unable to warn the user when there is an obstacle in their path until the user has touched it. Some incidents happen due to blind people did not sense the existence of an obstacle. The incidents might lead to serious injury on blind people.

Besides, white cane also does not have the ability to guide the user to travel to desired location. Blind people might get lost and face some risk or danger when they need to travel. They need to depend on people to bring them to a certain location or they can only travel in a place they are familiar with. Loss of eyesight causes inconvenience to a blind person.

OBJECTIVE

The main objective of this project is to design a smart cane to increase the mobility of a blind person and to implement a navigation system. To increase the mobility ability, ultrasonic sensor is used to sense obstacles and alert the blind people through vibration and sound. For navigation system, global positioning system is used to give direction and distance to the destination through audio output.

SCOPE

The project scope consists of two parts, hardware and software design. For hardware part, it mainly consists of ultrasonic sensor, vibrating motor, buzzer, Arduino UNO. For software part, C programming language is used to control the hardware input and output, Processing is used to interface with the Arduino IDE.

MODELING

Modeling is done using the following :-

- Arduino uno.
- Ultrasonic sensor(HCSR04).
- A Mini breadboard.
- 9 volt battery.
- 9 volt battery connector.
- DC male power jack.
- Buzzer.
- Some Jumper wire.
- A Toggle switch.
- Vibrating Motor

ARDUINO

- The Arduino Uno is a microcontroller board based on the ATmega328 (datasheet).

- It has 14 digital input/output pins (of which 6 can be used as PWM outputs), 6 analog inputs, a 16 MHz crystal oscillator, a USB connection, a power jack, an ICSP header, and a reset button.

- An Arduino board consists of an Atmel 8-,16- or 32-bit AVR microcontroller with complementary components that facilitate programming and incorporation into other circuits.

- An important aspect of the Arduino is its standard connectors, which let users connect the CPU board to a variety of interchangeable add-on modules termed shields.

Architecture:-

- Arduino's processor basically uses the Harvard architecture where the program code and program data have separate memory.
- It consists of two memories- Program memory and the data memory.
- The code is stored in the flash program memory, whereas the data is stored in the data memory

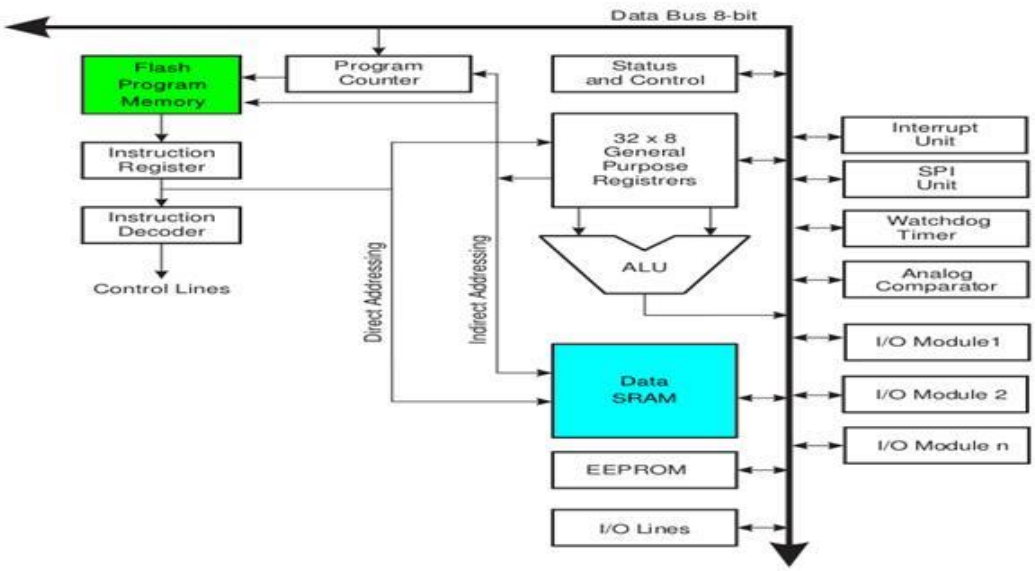

Applications:-

- ❖ Xoscillo, an open-source oscilloscope
- ❖ OBDuino, a trip computer that uses the on-board diagnostics interface found in most modern cars
- ❖ Ardupilot, drone software and hardware
- ❖ Arduino Phone, a do-it-yourself cellphone
- ❖ Water quality testing platform
- ❖ DC motor control using Arduino and H-Bridge

ULTRASONIC SENSOR

Ultrasonic sensor functions for detecting objects and responds with distance measured. Ultrasonic sensor uses frequency in order to detect objects. The frequency used for detecting objects is around 20 kHz to 100 kHz. It is mostly applied in ambient noise level, leak detection and material testing. The ultrasonic sensor is highly used as it is cheap, simple design and efficient.

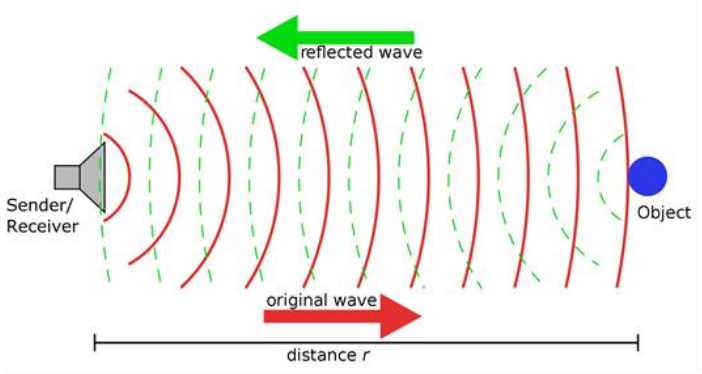

Figure: Sonar illustration

Ultrasonic sensor can be used for object detection. A transducer is implemented with highly directional ultrasonic range sensor to detect object in the surroundings. Figure 2.5 shows the operation of ultrasonic sensor to send and receive sonar to detect object. Ultrasonic sensor consists of wave producer, counter mass, amplifier and radiation section. Ultrasonic waves attenuate more frequently, which makes it become a better for directivity than other kinds of waves. Transmitter of ultrasonic sensor can be designed using Gallego Juarez's stepped plate where it consists of wave generation, amplification and radiation while microphone is used as receiver. Gallego Juarez's stepped plate is also used in producing intense wave for the parametric array purpose.

Figure 2.6 shows the schematic diagram of an ultrasonic sensor. At the end of the transducer is where the counter mass is located in order to ensure transducer produces same node point. The transducer material used is Lead Zirconate Titanate with different polarization. Linear Horn is used as amplification and radiating plate will consist of amplified high-intensity of ultrasound.

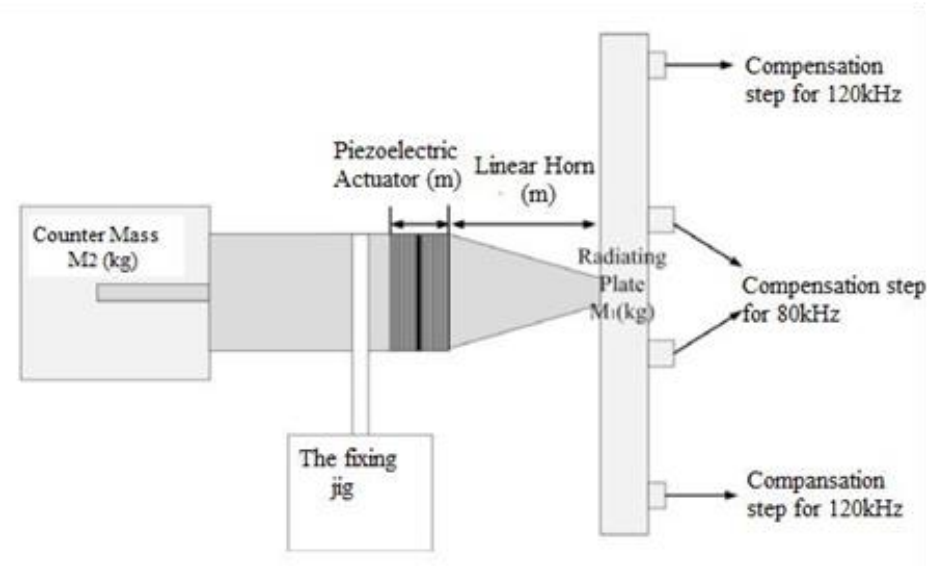

Figure: Schematic diagram of ultrasonic sensor

Dual- frequency wave is used as it has higher amplitude propagation. By using this method, single wave generation can be improved as a single wave cannot detect both object and distance detection accurately. The two waves need to have different frequencies. Two different frequencies are generated through axi symmetric mode with different nodal circles. A mathematical model is needed to adjust the radiation section in order to produce dual frequency wave.

BREADBOARD

- A breadboard is a construction base for prototyping of electronics.
- Originally it was literally a bread board, a polished piece of wood used for slicing bread.
- Electronic circuits can be interconnected by inserting their leads or terminals into the holes and then making connections through wires where appropriate.

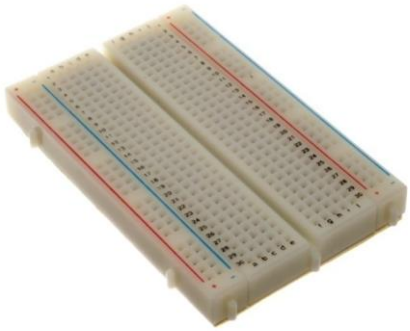

OUTPUT DEVICES

Buzzer

- A buzzer or beeper is an audio signalling device, which may be mechanical, electromechanical, or piezoelectric.

Vibration Motor

- Vibration motor is a compact size coreless DC motor used to inform the users of receiving the signal by vibrating, no sound.

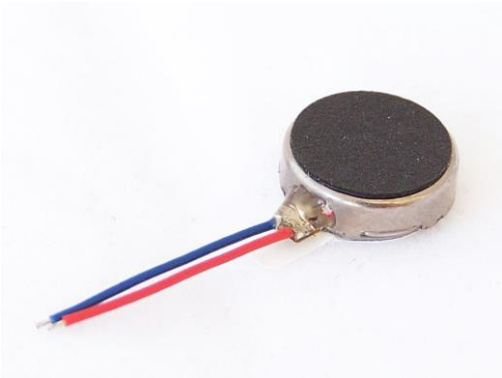

Wiring

You can see the wiring diagram from the above image . here i will explain by parts :

- Ultrasonic VCC to Arduino 5v.
- Ultrasonic GND to Arduino GND.
- Ultrasonic TRIG to Arduino D12.
- Ultrasonic ECHO to Arduino D11.
- Buzzer RED to Arduino D8.
- Buzzer BLACK to Arduino GND.
- Vibrator motor pin 1 to Arduino D7.
- Vibrator motor pin 2 to Arduino GND
- 9 volt battery RED to Toggle switch pin 1.
- 9 volt battery BLACK to DC male power jack(-).
- Toggle switch pin 2 to DC male power jack (+).
- Now we finished the wiring

CIRCUIT DIAGRAM

In this Blind Stick Circuit, we have used a Ultrasonic Sensor to detect any object within certain distance. A vibrator motor is used vibrate when an object is detected.

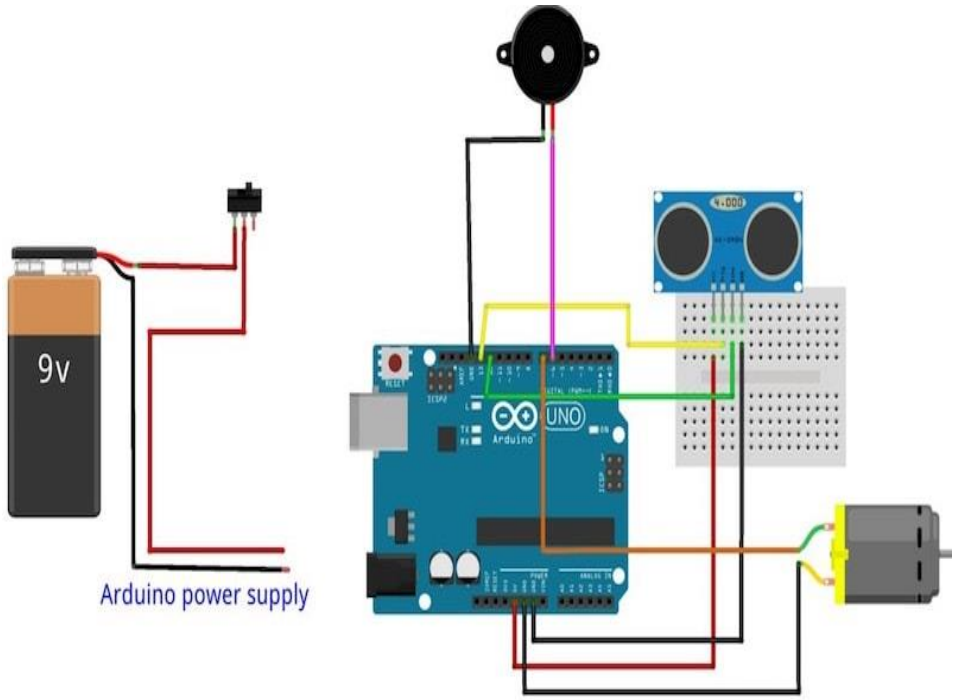

CODE

```
#define trigPin 12
#define echoPin 11
#define motor 7
#define buzzer 8

void setup()
{ pinMode(trigPin, OUTPUT);
pinMode(echoPin, INPUT);
pinMode(motor, OUTPUT);
pinMode(buzzer,OUTPUT);
}

void loop()
{ long duration, distance;
digitalWrite(trigPin, LOW);
delayMicroseconds(2);
digitalWrite(trigPin, HIGH);
delayMicroseconds(10);
digitalWrite(trigPin, LOW);

duration = pulseIn(echoPin, HIGH);
distance = (duration/2) / 29.1;

if (distance < 70) // Checking the distance, you can change
the value
{
digitalWrite(motor,HIGH); // When the the distance below
100cm
digitalWrite(buzzer,HIGH);
} else
{
digitalWrite(motor,LOW);// when greater than 100cm
digitalWrite(buzzer,LOW);
} delay(500);
}
```

System Integration and Testing:

After all hardware has been developed, those developments needed to be integrated as a complete system. Next, the complete system needs to be tested to ensure that the system integration is functioning as required. Before integrating all part of hardware developments, each part needs to be tested by its own so that troubleshooting can easily performed when there is any error.

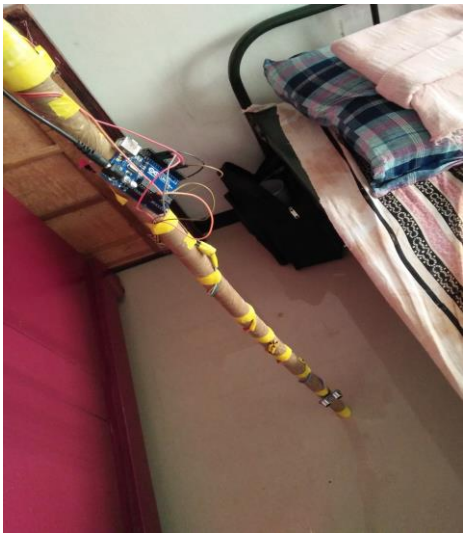

Fig.: Blind stick during testing

Project Management:

This project management discussed the management of the project toward achieving the objectives. Effective's project planning such as the development of project schedule and the cost estimation for the project has been done to complete this project successfully.

Cost Estimation:

The overall cost involved to develop this project has been calculated by considering standard price for the components such as arduino uno, sensor and others.
In order to get a minimal cost for this system development, market survey from certain websites or shop was carried out before selecting the components. This
approach can helps to get a cheapest price for the components because customer has a choice to buy same components with the different types of price. As a student,
lower price is a priority. Following table shows the cost estimation for cigarette smoke detector.

Component	Cost
Arduino Uno	500
1xUltrasonic sensor	300
1xBreadboard	60
1xBuzzer	50
1xVibrator	60
Toggle switch	10
Male/Female connector	20
9 volt battery	80
Total	1080/-

FUTURE WORK

- We shall attach the circuit of ultrasonic sensor to a stick.
- We will check first whether the circuit is working without any error and the buzzer is making a significant sound.
- Then we will ask a blind person to use the stick and check whether it is helping him to locate the obstacles.
- The system can be develop by adding a real time image capturing. This real time image capturing is develop to capture the image of the object or any accident if any. This can be develop by using arduino uno. Arducam shield module can be used as a camera to be connected with arduino uno. Arducam shield module has higher resolution in capturing image which is up to 2 mega pixel. Hence, there are no problems in identifying the obstacle.
- The system also can be develop by adding an Arduino GSM shield. The use of this Arduino GSM shield is for sending short message service (SMS) to the authorities.

CONCLUSION

The project proposed the design and architechture of a new concept of smart electronic guiding stick for blind people. The advantage of the system lies in the fact that it can prove to be very low cost solution to millions of blind person worldwide.It can be further improved to have more decisions talking capabilities by employing varied types of sensor and thus could be used for different applications.

REFERENCES

1. World Health Organization (WHO) media centre factsheet(2011), http://www.who.int/mediacentre/factsheets/fs282/en

2. Electronic Devices and Circuits by Jacob Millman & Christos C. Halkias

3. Article on blind stick from Instructables.
4. Micro processors and interfacing by Douglas V. hall

5. WHITE CANE Wikipedia: https://en.wikipedia.org/wiki/White_cane.