DESIGN OF MULTI- STOREYED RESIDENTIAL BUILDING

PROJECT REPORT

Submitted by

DHINESH KUMAR. M	**731115103007**
GOWTHAMAN. P	**731115103013**
RAGHAVAN. U	**731115103031**
SATHYANARAYANAN. D	**731115103040**

in partial fulfillment for the award of the degree

of

BACHELOR OF ENGINEERING

IN

CIVIL ENGINEERING

INSTITUTE OF ROAD AND TRANSPORT TECHNOLOGY

Erode- 638 316

ANNA UNIVERSITY: CHENNAI 600 025

OCTOBER-2018

ANNA UNIVERSITY: CHENNAI 600 025

BONAFIDE CERTIFICATE

Certified that this is project report on **"DESIGN OF MULTI- STOREYED BUILDING"** is the bonafide work of

DHINESH KUMAR. M	**731115103007**
GOWTHAMAN. P	**731115103013**
RAGHAVAN. U	**731115103031**
SATHYANARAYANAN. D	**731115103040**

who carried out the project work under our supervision.

SIGNATURE OF HOD
Dr. R. MURUGESAN M.E, Ph.D.,
HEAD OF THE DEPARTMENT
Department of Civil Engineering
Institute of road and transport technology
Erode- 638 316

SIGNATURE OF SUPERVISOR
Dr. P. SARAVANAKUMAR M.E, Ph.D.,
ASSISTANT PROFESSOR
Department of Civil Engineering
Institute of road and transport technology
Erode- 638 316

Submitted for the University Practical Examination on..... at the Institute of Road and Transport Technology Centre.

Internal Examiner **External Examiner**

TABLE OF CONTENTS

S.NO.	TITLE	PAGE No.
1.	**ABSTRACT**	5
2.	**LIST OF SYMBOLS AND ABBREVIATIONS**	6
3.	**INTRODUCTION**	
	3.1. IDEA	8
	3.2. OBJECTIVE	8
	3.3. PROCESSES INVOLVED	8
4.	**STRUCTURAL COMPONENTS OF BUILDING**	
	4.1. SLAB	10
	4.2. BEAM	11
	4.3. COLUMN	12
	4.4. FOOTING	13
	4.5. STAIR CASE	14
5.	**GENERAL DETAILS OF PROJECT**	
	5.1. DESCRIPION	
6.	**PLAN**	
	6.1. GROUND FLOOR	19
	6.2. FIRST FLOOR	20

7. STAAD-PRO DETAILS

7.1. ANALYSIS AND DESIGN 22

7.2. ANALYSIS OF STRUCTURE 38

7.3. 2-D DIMENSIONAL VIEW 39

7.4. NODE OF THE STRUCTURE 40

7.5. SHEAR & SHEAR REINFORCEMENT 41

7.6. BENDING & REINFORCEMENT 42

7.7. PROPERTIES OF STRUCTURE 43

7.8. LOAD AND DEFINITION 44

8. MANUAL STRUCTURAL DESIGN

8.1. SLAB 50

8.2. BEAM 55

8.3. COLUMN 59

8.4. FOOTING 62

8.5. STAIR CASE 64

9. CONCLUSION 67

10. REFERENCE 69

1. ABSTRACT

The design of the G+6 multi-storied building starts with the planning of the residential building both for individual house and total layout of the building. The building has an overall area of 530 sq.m with four houses in each floor. Each house an area of 121 sq.m. Ground floor is used for parking with a capacity of 30 cars. Total building is designed in AutoCAD and analyzed by STAAD Pro. REVIT Architecture software is used for 3D diagrams and renderings. After being analyzed by STAAD Pro the results are verified by manual design using code books **IS 456-2000** and **SP-16**.

STAAD Pro is the new advancement in structural engineering. This software is used for analysis and design of concrete, steel, timber and aluminum. The model is been created and analyzed under various load condition such as dead load, live load, and some combination. As a result of analysis, shear force, bending moment and support reaction are evaluated. Based on analyzed result, the structure is designed manually and cross referenced with the software results.

2. LIST OF SYMBOLS AND ABBREVIATIONS

Ast	-	Area of Steel
Ast (Min)	-	Minimum Area of Steel
Ast (Pro)	-	Area of Steel Provided
Asc	-	Area of Concrete
D	-	Effective Depth
D	-	Overall Depth
H	-	Height Ratio
L	-	Length
B	-	Breadth
M	-	Bending Moment
P_a	-	Active Earth Pressure
Mu (supp)	-	Ultimate Moment at Supports
Mu (mid)	-	Ultimate Moment at Centre
V_u	-	Ultimate Shear Stress
M_u	-	Ultimate Moment of Resistance
W_u	-	Factored Load or Design Load
Fck	-	Compressive Strength of Concrete
f_y	-	Yielding Strength of Steel
P	-	Safe Bearing Capacity of Soil
R	-	Rise
T	-	Tread
ϕ	-	Diameter of the bar
L_x	-	Effective length of shorter span of slab
L_y	-	Effective length of longer span of slab
Fsc	-	Stress in Compression Steel
Asc	-	Area of Compression Steel
A_g	-	Gross Area of Column
P_t	-	Percentage of Tension Reinforcement
Mu (limit)	-	Limiting Moment of Resistance
S_v	-	Spacing of Stirrups

3. INTRODUCTION

INTRODUCTION

3.1 IDEA

Designing and analyzing of G+6 multi storied residential building using analyzing software STAAD Pro. Structural analysis is the backbone of civil engineering. During recent years, there has been a growing emphasis on using computer aided software's and tools to analyze the structures. These developments are most welcome, as they relieve the engineer of the often-lengthy calculations and procedures required to be followed while large or complicated structures are analyzed using classical methods. But not all the time such detailed analysis is necessary to be performed. Now-a-days, high rise buildings and multistory buildings are common in metropolitan cities. These multistoried buildings have large number of Joints which are free to move and it is very difficult and time consuming when it analyzed manually. Hence the computer method for analysis is used using the modern analyzing software STAAD Pro.

3.2 OBJECTIVE

1)To analyze the multi-storey residential building consists of 6 floors using STAAD Pro.

2) To obtain the results of Maximum shear force and Maximum bending Moment for beams, Maximum axial force for columns.

3) To design the critical structural members of beam, column, slab, footing and staircase using IS 456-2000 & SP-16.

3.3 PROCESSES INVOLVED

- To visit the site and analyze the general site conditions and its orientation.
- To prepare the plans using AutoCAD.
- Analyzing the frame, using standard analysis software STAAD Pro for load conditions as per IS 456-2000.
- Identifying the critical frame.
- Comparing the critical beam and column with the manual calculations designed using IS 456-2000.
- Designing the slab, footing, staircase as per IS 456-2000 and SP-16 design aids.

4.STRUCTURAL COMPONENTS OF BUILDING

STRUCTURAL COMPONENTS OF BUILDING

4.1 SLABS:

It is a structural member subjected to flexure and transmits imposed and dead load to supports.

Imposed loads are the weights of occupants, furniture, machinery, weight of snow and Dead loads are self-weight of slab and weight of flooring slabs fro floors and roofs of building. Generally, they are assumed to carry uniformly distributed loads. In most cases, slabs are analyzed for flexure only. Usually, slabs are horizontal except in the case of staircase and ramps for stored car parks. Beams and walls support slabs. The various types of slab provided are the following,

1. Simply supported slabs spanning in one direction (One-way slabs).
2. Simply supported slabs spanning in two direction (Two-way slabs).
3. Continuous slabs. (These slabs may be one way or two-way slabs).
4. Cantilever slabs.
5. Flat slabs.

Consider a slab panel supported on all this four sides. If the ratio of the long span to the short span is greater than 2 the load on the slab is taken as carried by the short span. Such a slab is considered as a one-way slab. If the ratio of the long span to the short span is less than of 2, the load on the slab is carried partly by the short span and partly by the long span. A greater part of the load is carried by the short span.

A one-way slab is simply a wide shallow rectangular beam as far as analysis is concerned. The reinforcing steel bars are spaced uniformly over its width. For the sake of convenience, a one-meter width of the slab is considered for analysis, or

designed, as loads are generally specified in terms of load per square meter. Hence, on a one-meter wide strip, this unit load becomes the load per linear meter. The effective area steel A_{st} corresponds to a certain member of bars in the one-meter width of slab.

4.2 BEAMS:

Structural concrete beam elements are designed to support a given system of external loads such as walls and slabs of roof and floor systems. The cross-sectional dimensions are generally assumed based on serviceability requirements. The width is fixed based on thickness of walls and housing of reinforcements and the depth is selected to control deflection within safe permissible limits.

The reinforcements in beam are designed for flexure and shear forces along the length of the beam based on structural analysis. The designed beam is checked for the limit states of serviceability and safety against collapse.

The design problem has several solutions and is not unique since several parameters such as material properties, cross-sectional dimensions and loads control the design of reinforcements. The aim of the design should be to provide economical designs consistent with safety and serviceability.

4.2.1 TYPES OF BEAMS

1. Rectangular beams.
2. T-beams.
3. L-beams.

1. RECTANGULAR BEAMS

If the slab and beams cast separately then the beam designed as rectangular beam. The rectangular beam further classified into two types.

1. Singly reinforced rectangular beams.
2. Doubly reinforced rectangular beams.

The classification based on limiting moment.

2. T-BEAMS

The most common type of reinforced concrete floors and roof system comprises slabs monolithically cast with floor beams in the span range of 5 to 10 m. In such cases, the compressive flange is made up of the width of rip and a portion of the slab length on either side of the rib referred to as the effective width of flange. Effective width of flange of T-beam. $b_f = (Lo / 6 + b_w + 6D_f)$

3. L-BEAMS

The edge beams which are cast monolithic with slabs on one side of the rib only are designed as L-beams. Due to eccentricity of load transferred from the flange. Torsion moments develop in the beams in addition to the bending moments and shear forces.

The tensional and hogging bending moments are maximum at the support sections. The support section of the L-beam is the most critical section subjected to combined bending, torsion and shear and this section is designed according to the provisions of the IS:456-2000 Code outlined in section of the text.

4.3 COLUMNS:

A column is generally a compression member supporting beams and slabs in a structural system and having an effective length exceeding three times the lateral dimension. Load carrying capacity of a column is depending upon the longitudinal steel and cross-sectional size of the column.

4.3.1 TYPES OF COLUMNS

1. **Axially loaded column**

Load is acting exactly at the centroid of column is called axially loaded column.

2. **Uniaxial eccentrically loaded column**

Axial load and bending moment acting along one direction is known as uniaxial loaded column.

3. **Biaxial eccentrically loaded column**

Axial load and bending moment acting along both directions is known as biaxial loaded column.

4.4 FOOTINGS

The foundation or footing is a very important part of the structure, located below the ground level.

In footing the load coming from the column is transfer into the base at dispersion angle of 45 degree. Generally, one-way shear or vertical shear failure in columns occurs at sections (effective depth) from face of the column.

4.4.1 TYPES OF FOOTINGS

1. **Shallow foundation**

Depth of the foundation is less than or equal to width of footing is called as shallow foundation.

2. **Deep foundation**

Depth of the foundation is greater than width of footing is called as deep foundation.

4.5 STAIRCASES:

Stairs consists of step arranged in a series for the purpose of giving access to different floors of a building. Since a stair is often the only means of communication between the various floors of the building, the location of the stair requires good and careful consideration. In a residential house the stair case may be provided near the main entrance. In a public building, the stair must be from the main entrance itself and located centrally, to provide quick accessibility to the principal apartments. All staircases should be adequately lighted and properly ventilated.

4.5.1 TYPES OF STAIRS

1. **Straight Stair**

This consists of step leading in the same direction. This is provided in long narrow stair case. This often consists of one flight; but in some circumstance it may consists of two flights with an intermediate landing.

2. **Dog Legged Stair**

In this type, the succeeding flights rise in opposite directions. The two flights, in plan, are not separated by a well. A landing provided corresponding to the level at which the direction of flight changes.

3. Open Well Stair

In this type, a rectangular well or opening is left between forward and backward flights. This type of stairs is a very comfortable form. The well assists as a means for good lighting. The forward and backward flights may be connecting the forward and backward flights with a quarter space landing on each side of the short flight.

4. Geometrical Stair

In this type of stair, the well between the forward and backward flights in curved. Winders are therefore used these winders have a certain width even at inner edge.

5.GENERAL DETAILS OF THE PROJECT

GENERAL DETAILS OF THE PROJECT

5.1. GENERAL DESCRIPTION

1. Type of Building - G+6 residential building

2. Number of storey - 6 storeys

3. Types of foundation - Sloped foundation

4. Height of building - 22m from G.L

5. Total gross area of the building - 530 sq.m

6. Column Size - 300X600 & 600X300 mm

7. Beam Size – 230X300 & 300X350 mm

6. PLAN

6.1. GROUND FLOOR

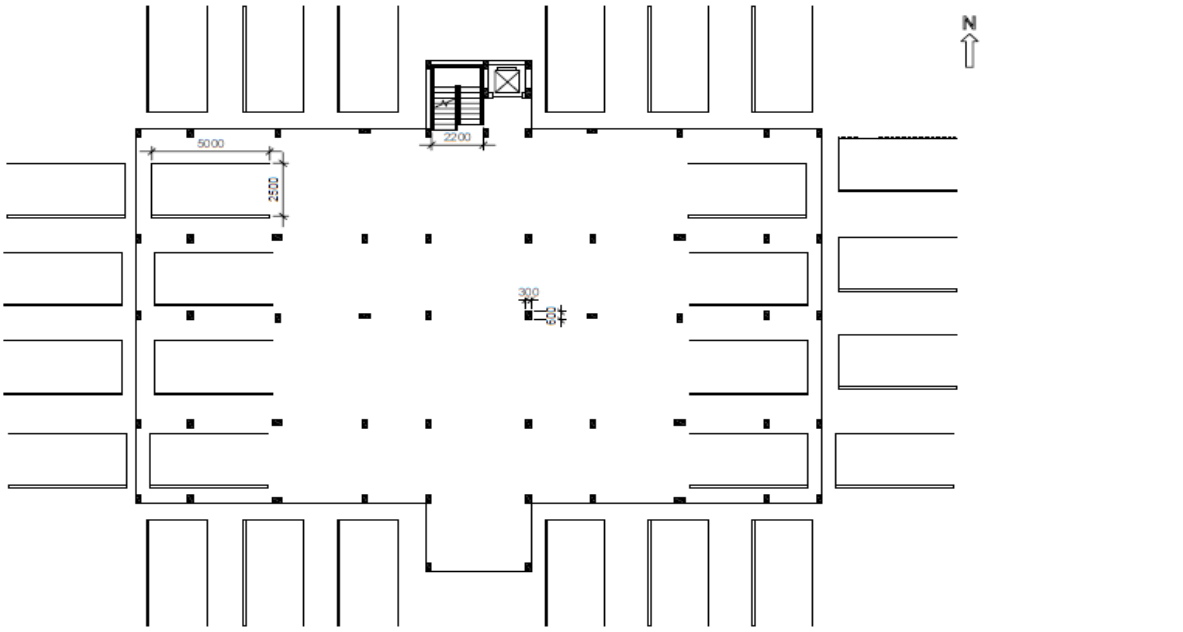

ALL DIMENSIONS ARE IN mm

STRUCTURAL PLAN

6.2. FIRST FLOOR

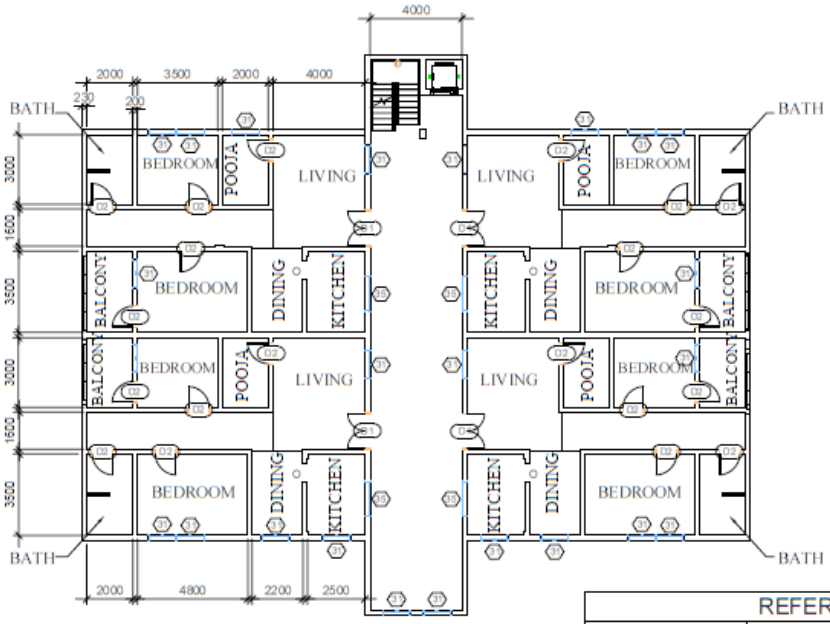

TYPICAL PLAN

REFERENCE		
TYPE	DESCRIPTION	SIZE
D1	EXTERNAL DOOR	1000X2100
D2	INTERNAL DOOR	800X2100
31	WINDOW	1000X1200
34	VENTILATOR	800X600
35	WINDOW	1500X1000

ALL DIMENSIONS ARE IN mm

7.STAAD-PRO ANALYSIS

7.1 ANALYSIS AND DESIGN

GENERAL:

The frames can be analyzed either by 2D or 3D analysis.

2D ANALYSIS:

The 2D analysis methods are

1. Slope deflection method.
2. Moment distribution method.
3. Matrix stiffness method.
4. Conjugate beam method.
5. Matrix flexibility method.

3D ANALYSIS:

The members or pin - jointed space carry only axial forces provided the loads are applied at the joints and the members are straight. The nature of the stress in the members of a pin – jointed frame is the same whether it is a plane frame or a space frame. A large number of pin – jointed frames commonly encountered in practice, such as radio and transmission tower are 3D space frames.

The 3D analysis methods are

1. Force method.
2. Displacement method.

SOFTWARE PACKAGE:

STAAD Pro V8i (SS6 Version) is the most popular structural engineering software product for 3D model generation, analysis and multi – material design.

It has an intuitive, user friendly, visualization tools, powerful analysis and design facilities and seamless integration to several other modeling and design products.

For static or dynamic analysis of bridges, containment structures, embedded structures (tunnels and culverts), pipe racks, steel, concrete, aluminum or timber buildings, transmission towers, stadiums or many other simple or complex structure, STAAD Pro has been the choice of design professionals around the world for their specific analysis need.

ANALYSIS:

The design of multi-storied building is done by using structural package namely STAAD Pro.

DESIGN CRITERIA:

Concrete grade : M30 N/mm^2

Steel grade : Fe 415 N/mm^2 for beam & slab

Fe 500 N/mm^2 for column

Wind effect is not considered

Earthquake effect is considered

Member sizes:

Beam : 230X300 mm & 300X350 mm

Column : 300X600 mm & 600X300 mm

Slab thickness : 125mm

Dead loads:

Unit weight of the concrete : 25 KN/m^3

Unit weight of the brick : 20 KN/m^3

Self-weight of the critical beam : 2.013 KN/m

Self-weight of the column : 4.5 KN/m

Self-weight of the slab : 3.125 KN/m

Floor finish : 1 KN/m^2

Live loads:

For residential building : 2 KN/m^2

ANALYSIS:

The following ANALYSIS facilities are available in STAAD Pro

1. Stiffness Analysis/Linear Analysis.
2. Second Order Static Analysis
    - P-Delta Analysis
    - Non-Linear Analysis
    - Multi Linear Analysis
    - Member/Spring Tension/Compression only
3. Dynamic Analysis
    - Time History
    - Response Spectrum

We have already designed our building according to the stiffness Analysis/Linear Static Analysis.

STIFFNESS ANALYSIS:

The stiffness analysis implemented in STAAD is based on the matrix displacement method. In the matrix analysis of structures by the displacement method, the structure is first idealized into an assembly of discrete structural components (framed members or finite elements). Each component

has an assumed form of displacement in a manner which satisfies the force equilibrium and displacement compatibility at the joints.

Structural systems such as slabs, plates, spread footing etc., which transmit loads in 2 directions have to be discredited into a member of 3 or 4 nodded finite elements connected to each other at their nodes. Loads may be applied in the form of distributed load on the element surface or as concentrated loads at the joints. The plane stress effects as well as the plate bending effects are taken into consideration in the analysis.

STAAD INPUT DETAILS:

The STAAD Input file represents our thought about what we want to analyze or design with knowledge of the STAAD command language, any other person can also verify the accuracy of work.

There are many ways to create structure in STAAD Pro

- Structure Wizard
- Staad Editor
- Using building planner
- Add Beam
- Add plate
- Copy and pasting the nodes

STAAD EDITOR:

```
STAAD SPACE
START JOB INFORMATION
ENGINEER DATE 13-Oct-18
END JOB INFORMATION
INPUT WIDTH 79
UNIT METER KN

JOINT COORDINATES
2 2.215 0 0; 3 5.915 0 0; 4 8.545 0 0; 5 8.545 0 -3.23; 6 11.245 0 -3.23;
7 12.805 0 -3.23; 8 12.805 0 -1.7; 9 12.805 0 0; 10 11.245 0 -1.7;
11 11.245 0 0; 12 15.6 0 0; 13 19.3 0 0; 14 23 0 0; 15 25.215 0 0;
23 2.215 0 5.015; 24 5.915 0 5.015; 25 19.3 0 5.015; 26 23 0 5.015;
27 25.215 0 5.015; 28 8.545 0 5.015; 29 -1.485 0 0; 31 -1.485 0 5.015;
32 -3.7 0 0; 34 -3.7 0 5.015; 35 12.805 0 5.015; 36 15.6 0 5.015;
37 2.215 0 8.73; 38 5.915 0 8.73; 39 19.3 0 8.73; 40 23 0 8.73;
41 25.215 0 8.73; 42 8.545 0 8.73; 43 -1.485 0 8.73; 44 -3.7 0 8.73;
45 12.805 0 8.73; 46 15.6 0 8.73; 57 2.215 0 13.745; 58 5.915 0 13.745;
59 19.3 0 13.745; 60 23 0 13.745; 61 25.215 0 13.745; 62 8.545 0 13.745;
63 -1.485 0 13.745; 64 -3.7 0 13.745; 65 12.805 0 13.745; 66 15.6 0 13.745;
67 2.215 0 17.46; 68 5.915 0 17.46; 69 19.3 0 17.46; 70 23 0 17.46;
71 25.215 0 17.46; 72 8.545 0 17.46; 73 -1.485 0 17.46; 74 -3.7 0 17.46;
75 12.805 0 17.46; 76 15.6 0 17.46; 77 8.545 0 20.69; 78 12.805 0 20.69;
79 2.215 -2 0; 80 5.915 -2 0; 81 8.545 -2 0; 82 8.545 -2 -3.23;
83 11.245 -2 -3.23; 84 12.805 -2 -3.23; 85 12.805 -2 -1.7; 86 12.805 -2 0;
87 11.245 -2 -1.7; 88 11.245 -2 0; 89 15.6 -2 0; 90 19.3 -2 0; 91 23 -2 0;
92 25.215 -2 0; 93 2.215 -2 5.015; 94 5.915 -2 5.015; 95 19.3 -2 5.015;
96 23 -2 5.015; 97 25.215 -2 5.015; 98 8.545 -2 5.015; 99 -1.485 -2 0;
100 -1.485 -2 5.015; 101 -3.7 -2 0; 102 -3.7 -2 5.015; 103 12.805 -2 5.015;
104 15.6 -2 5.015; 105 2.215 -2 8.73; 106 5.915 -2 8.73; 107 19.3 -2 8.73;
108 23 -2 8.73; 109 25.215 -2 8.73; 110 8.545 -2 8.73; 111 -1.485 -2 8.73;
112 -3.7 -2 8.73; 113 12.805 -2 8.73; 114 15.6 -2 8.73; 115 2.215 -2 13.745;
116 5.915 -2 13.745; 117 19.3 -2 13.745; 118 23 -2 13.745;
119 25.215 -2 13.745; 120 8.545 -2 13.745; 121 -1.485 -2 13.745;
122 -3.7 -2 13.745; 123 12.805 -2 13.745; 124 15.6 -2 13.745;
125 2.215 -2 17.46; 126 5.915 -2 17.46; 127 19.3 -2 17.46; 128 23 -2 17.46;
129 25.215 -2 17.46; 130 8.545 -2 17.46; 131 -1.485 -2 17.46;
132 -3.7 -2 17.46; 133 12.805 -2 17.46; 134 15.6 -2 17.46; 135 8.545 -2 20.69;
136 12.805 -2 20.69; 137 2.215 3 0; 138 5.915 3 0; 139 8.545 3 0;
140 8.545 3 -3.23; 141 11.245 3 -3.23; 142 12.805 3 -3.23; 143 12.805 3 -1.7;
144 12.805 3 0; 145 11.245 3 -1.7; 146 11.245 3 0; 147 15.6 3 0; 148 19.3 3 0;
149 23 3 0; 150 25.215 3 0; 151 2.215 3 5.015; 152 5.915 3 5.015;
153 19.3 3 5.015; 154 23 3 5.015; 155 25.215 3 5.015; 156 8.545 3 5.015;
157 -1.485 3 0; 158 -1.485 3 5.015; 159 -3.7 3 0; 160 -3.7 3 5.015;
161 12.805 3 5.015; 162 15.6 3 5.015; 163 2.215 3 8.73; 164 5.915 3 8.73;
165 19.3 3 8.73; 166 23 3 8.73; 167 25.215 3 8.73; 168 8.545 3 8.73;
169 -1.485 3 8.73; 170 -3.7 3 8.73; 171 12.805 3 8.73; 172 15.6 3 8.73;
173 2.215 3 13.745; 174 5.915 3 13.745; 175 19.3 3 13.745; 176 23 3 13.745;
177 25.215 3 13.745; 178 8.545 3 13.745; 179 -1.485 3 13.745;
180 -3.7 3 13.745; 181 12.805 3 13.745; 182 15.6 3 13.745; 183 2.215 3 17.46;
```

184 5.915 3 17.46; 185 19.3 3 17.46; 186 23 3 17.46; 187 25.215 3 17.46;
188 8.545 3 17.46; 189 -1.485 3 17.46; 190 -3.7 3 17.46; 191 12.805 3 17.46;
192 15.6 3 17.46; 193 8.545 3 20.69; 194 12.805 3 20.69; 195 2.215 6 0;
196 5.915 6 0; 197 8.545 6 0; 198 8.545 6 -3.23; 199 11.245 6 -3.23;
200 12.805 6 -3.23; 201 12.805 6 -1.7; 202 12.805 6 0; 203 11.245 6 -1.7;
204 11.245 6 0; 205 15.6 6 0; 206 19.3 6 0; 207 23 6 0; 208 25.215 6 0;
209 2.215 6 5.015; 210 5.915 6 5.015; 211 19.3 6 5.015; 212 23 6 5.015;
213 25.215 6 5.015; 214 8.545 6 5.015; 215 -1.485 6 0; 216 -1.485 6 5.015;
217 -3.7 6 0; 218 -3.7 6 5.015; 219 12.805 6 5.015; 220 15.6 6 5.015;
221 2.215 6 8.73; 222 5.915 6 8.73; 223 19.3 6 8.73; 224 23 6 8.73;
225 25.215 6 8.73; 226 8.545 6 8.73; 227 -1.485 6 8.73; 228 -3.7 6 8.73;
229 12.805 6 8.73; 230 15.6 6 8.73; 231 2.215 6 13.745; 232 5.915 6 13.745;
233 19.3 6 13.745; 234 23 6 13.745; 235 25.215 6 13.745; 236 8.545 6 13.745;
237 -1.485 6 13.745; 238 -3.7 6 13.745; 239 12.805 6 13.745; 240 15.6 6 13.745;
241 2.215 6 17.46; 242 5.915 6 17.46; 243 19.3 6 17.46; 244 23 6 17.46;
245 25.215 6 17.46; 246 8.545 6 17.46; 247 -1.485 6 17.46; 248 -3.7 6 17.46;
249 12.805 6 17.46; 250 15.6 6 17.46; 251 8.545 6 20.69; 252 12.805 6 20.69;
253 2.215 9 0; 254 5.915 9 0; 255 8.545 9 0; 256 8.545 9 -3.23;
257 11.245 9 -3.23; 258 12.805 9 -3.23; 259 12.805 9 -1.7; 260 12.805 9 0;
261 11.245 9 -1.7; 262 11.245 9 0; 263 15.6 9 0; 264 19.3 9 0; 265 23 9 0;
266 25.215 9 0; 267 2.215 9 5.015; 268 5.915 9 5.015; 269 19.3 9 5.015;
270 23 9 5.015; 271 25.215 9 5.015; 272 8.545 9 5.015; 273 -1.485 9 0;
274 -1.485 9 5.015; 275 -3.7 9 0; 276 -3.7 9 5.015; 277 12.805 9 5.015;
278 15.6 9 5.015; 279 2.215 9 8.73; 280 5.915 9 8.73; 281 19.3 9 8.73;
282 23 9 8.73; 283 25.215 9 8.73; 284 8.545 9 8.73; 285 -1.485 9 8.73;
286 -3.7 9 8.73; 287 12.805 9 8.73; 288 15.6 9 8.73; 289 2.215 9 13.745;
290 5.915 9 13.745; 291 19.3 9 13.745; 292 23 9 13.745; 293 25.215 9 13.745;
294 8.545 9 13.745; 295 -1.485 9 13.745; 296 -3.7 9 13.745;
297 12.805 9 13.745; 298 15.6 9 13.745; 299 2.215 9 17.46; 300 5.915 9 17.46;
301 19.3 9 17.46; 302 23 9 17.46; 303 25.215 9 17.46; 304 8.545 9 17.46;
305 -1.485 9 17.46; 306 -3.7 9 17.46; 307 12.805 9 17.46; 308 15.6 9 17.46;
309 8.545 9 20.69; 310 12.805 9 20.69; 311 2.215 12 0; 312 5.915 12 0;
313 8.545 12 0; 314 8.545 12 -3.23; 315 11.245 12 -3.23; 316 12.805 12 -3.23;
317 12.805 12 -1.7; 318 12.805 12 0; 319 11.245 12 -1.7; 320 11.245 12 0;
321 15.6 12 0; 322 19.3 12 0; 323 23 12 0; 324 25.215 12 0; 325 2.215 12 5.015;
326 5.915 12 5.015; 327 19.3 12 5.015; 328 23 12 5.015; 329 25.215 12 5.015;
330 8.545 12 5.015; 331 -1.485 12 0; 332 -1.485 12 5.015; 333 -3.7 12 0;
334 -3.7 12 5.015; 335 12.805 12 5.015; 336 15.6 12 5.015; 337 2.215 12 8.73;
338 5.915 12 8.73; 339 19.3 12 8.73; 340 23 12 8.73; 341 25.215 12 8.73;
342 8.545 12 8.73; 343 -1.485 12 8.73; 344 -3.7 12 8.73; 345 12.805 12 8.73;
346 15.6 12 8.73; 347 2.215 12 13.745; 348 5.915 12 13.745; 349 19.3 12 13.745;
350 23 12 13.745; 351 25.215 12 13.745; 352 8.545 12 13.745;
353 -1.485 12 13.745; 354 -3.7 12 13.745; 355 12.805 12 13.745;
356 15.6 12 13.745; 357 2.215 12 17.46; 358 5.915 12 17.46; 359 19.3 12 17.46;
360 23 12 17.46; 361 25.215 12 17.46; 362 8.545 12 17.46; 363 -1.485 12 17.46;
364 -3.7 12 17.46; 365 12.805 12 17.46; 366 15.6 12 17.46; 367 8.545 12 20.69;
368 12.805 12 20.69; 369 2.215 15 0; 370 5.915 15 0; 371 8.545 15 0;
372 8.545 15 -3.23; 373 11.245 15 -3.23; 374 12.805 15 -3.23;
375 12.805 15 -1.7; 376 12.805 15 0; 377 11.245 15 -1.7; 378 11.245 15 0;
379 15.6 15 0; 380 19.3 15 0; 381 23 15 0; 382 25.215 15 0; 383 2.215 15 5.015;

384 5.915 15 5.015; 385 19.3 15 5.015; 386 23 15 5.015; 387 25.215 15 5.015;
388 8.545 15 5.015; 389 -1.485 15 0; 390 -1.485 15 5.015; 391 -3.7 15 0;
392 -3.7 15 5.015; 393 12.805 15 5.015; 394 15.6 15 5.015; 395 2.215 15 8.73;
396 5.915 15 8.73; 397 19.3 15 8.73; 398 23 15 8.73; 399 25.215 15 8.73;
400 8.545 15 8.73; 401 -1.485 15 8.73; 402 -3.7 15 8.73; 403 12.805 15 8.73;
404 15.6 15 8.73; 405 2.215 15 13.745; 406 5.915 15 13.745; 407 19.3 15 13.745;
408 23 15 13.745; 409 25.215 15 13.745; 410 8.545 15 13.745;
411 -1.485 15 13.745; 412 -3.7 15 13.745; 413 12.805 15 13.745;
414 15.6 15 13.745; 415 2.215 15 17.46; 416 5.915 15 17.46; 417 19.3 15 17.46;
418 23 15 17.46; 419 25.215 15 17.46; 420 8.545 15 17.46; 421 -1.485 15 17.46;
422 -3.7 15 17.46; 423 12.805 15 17.46; 424 15.6 15 17.46; 425 8.545 15 20.69;
426 12.805 15 20.69; 427 2.215 18 0; 428 5.915 18 0; 429 8.545 18 0;
430 8.545 18 -3.23; 431 11.245 18 -3.23; 432 12.805 18 -3.23;
433 12.805 18 -1.7; 434 12.805 18 0; 435 11.245 18 -1.7; 436 11.245 18 0;
437 15.6 18 0; 438 19.3 18 0; 439 23 18 0; 440 25.215 18 0; 441 2.215 18 5.015;
442 5.915 18 5.015; 443 19.3 18 5.015; 444 23 18 5.015; 445 25.215 18 5.015;
446 8.545 18 5.015; 447 -1.485 18 0; 448 -1.485 18 5.015; 449 -3.7 18 0;
450 -3.7 18 5.015; 451 12.805 18 5.015; 452 15.6 18 5.015; 453 2.215 18 8.73;
454 5.915 18 8.73; 455 19.3 18 8.73; 456 23 18 8.73; 457 25.215 18 8.73;
458 8.545 18 8.73; 459 -1.485 18 8.73; 460 -3.7 18 8.73; 461 12.805 18 8.73;
462 15.6 18 8.73; 463 2.215 18 13.745; 464 5.915 18 13.745; 465 19.3 18 13.745;
466 23 18 13.745; 467 25.215 18 13.745; 468 8.545 18 13.745;
469 -1.485 18 13.745; 470 -3.7 18 13.745; 471 12.805 18 13.745;
472 15.6 18 13.745; 473 2.215 18 17.46; 474 5.915 18 17.46; 475 19.3 18 17.46;
476 23 18 17.46; 477 25.215 18 17.46; 478 8.545 18 17.46; 479 -1.485 18 17.46;
480 -3.7 18 17.46; 481 12.805 18 17.46; 482 15.6 18 17.46; 483 8.545 18 20.69;
484 12.805 18 20.69; 485 2.215 21 0; 486 5.915 21 0; 487 8.545 21 0;
488 8.545 21 -3.23; 489 11.245 21 -3.23; 490 12.805 21 -3.23;
491 12.805 21 -1.7; 492 12.805 21 0; 493 11.245 21 -1.7; 494 11.245 21 0;
495 15.6 21 0; 496 19.3 21 0; 497 23 21 0; 498 25.215 21 0; 499 2.215 21 5.015;
500 5.915 21 5.015; 501 19.3 21 5.015; 502 23 21 5.015; 503 25.215 21 5.015;
504 8.545 21 5.015; 505 -1.485 21 0; 506 -1.485 21 5.015; 507 -3.7 21 0;
508 -3.7 21 5.015; 509 12.805 21 5.015; 510 15.6 21 5.015; 511 2.215 21 8.73;
512 5.915 21 8.73; 513 19.3 21 8.73; 514 23 21 8.73; 515 25.215 21 8.73;
516 8.545 21 8.73; 517 -1.485 21 8.73; 518 -3.7 21 8.73; 519 12.805 21 8.73;
520 15.6 21 8.73; 521 2.215 21 13.745; 522 5.915 21 13.745; 523 19.3 21 13.745;
524 23 21 13.745; 525 25.215 21 13.745; 526 8.545 21 13.745;
527 -1.485 21 13.745; 528 -3.7 21 13.745; 529 12.805 21 13.745;
530 15.6 21 13.745; 531 2.215 21 17.46; 532 5.915 21 17.46; 533 19.3 21 17.46;
534 23 21 17.46; 535 25.215 21 17.46; 536 8.545 21 17.46; 537 -1.485 21 17.46;
538 -3.7 21 17.46; 539 12.805 21 17.46; 540 15.6 21 17.46; 541 8.545 21 20.69;
542 12.805 21 20.69; 601 8.545 2 -3.23; 602 11.245 2 -3.23; 603 8.545 5 -3.23;
604 11.245 5 -3.23; 605 8.545 8 -3.23; 606 11.245 8 -3.23; 607 8.545 11 -3.23;
608 11.245 11 -3.23; 609 8.545 14 -3.23; 610 11.245 14 -3.23;
611 8.545 17 -3.23; 612 11.245 17 -3.23; 613 8.545 20 -3.23;
614 11.245 20 -3.23;

MEMBER INCIDENCES
1 32 29; 2 29 2; 3 2 3; 4 3 4; 5 4 11; 6 11 9; 7 9 12; 8 12 13; 9 13 14;
10 14 15; 11 5 6; 12 6 7; 13 10 8; 19 34 31; 20 31 23; 21 23 24; 22 24 28;

23 28 35; 24 35 36; 25 36 25; 26 25 26; 27 26 27; 28 44 43; 29 43 37; 30 37 38;
31 38 42; 32 42 45; 33 45 46; 34 46 39; 35 39 40; 36 40 41; 42 64 63; 43 63 57;
44 57 58; 45 58 62; 46 62 65; 47 65 66; 48 66 59; 49 59 60; 50 60 61; 51 74 73;
52 73 67; 53 67 68; 54 68 72; 55 72 75; 56 75 76; 57 76 69; 58 69 70; 59 70 71;
60 77 78; 63 23 37; 66 57 67; 67 3 24; 68 24 38; 69 38 58; 70 58 68; 71 5 4;
72 4 28; 73 28 42; 74 42 62; 75 62 72; 76 72 77; 77 6 10; 78 10 11; 79 7 8;
80 8 9; 81 9 35; 82 35 45; 83 45 65; 84 65 75; 85 75 78; 86 12 36; 87 36 46;
88 46 66; 89 66 76; 92 25 39; 95 59 69; 98 26 40; 101 60 70; 104 27 41;
107 61 71; 110 31 43; 113 63 73; 116 34 44; 119 64 74; 120 32 34; 121 29 31;
122 2 23; 123 44 64; 124 43 63; 125 37 57; 126 39 59; 127 40 60; 128 41 61;
129 15 27; 130 14 26; 131 13 25; 132 2 79; 133 3 80; 134 4 81; 135 5 82;
136 6 83; 137 7 84; 138 8 85; 139 9 86; 140 10 87; 141 11 88; 142 12 89;
143 13 90; 144 14 91; 145 15 92; 146 23 93; 147 24 94; 148 25 95; 149 26 96;
150 27 97; 151 28 98; 152 29 99; 153 31 100; 154 32 101; 155 34 102;
156 35 103; 157 36 104; 158 37 105; 159 38 106; 160 39 107; 161 40 108;
162 41 109; 163 42 110; 164 43 111; 165 44 112; 166 45 113; 167 46 114;
168 57 115; 169 58 116; 170 59 117; 171 60 118; 172 61 119; 173 62 120;
174 63 121; 175 64 122; 176 65 123; 177 66 124; 178 67 125; 179 68 126;
180 69 127; 181 70 128; 182 71 129; 183 72 130; 184 73 131; 185 74 132;
186 75 133; 187 76 134; 188 77 135; 189 78 136; 230 2 137; 231 3 138;
232 4 139; 233 5 601; 234 6 602; 235 7 142; 236 8 143; 237 9 144; 238 10 145;
239 11 146; 240 12 147; 241 13 148; 242 14 149; 243 15 150; 244 23 151;
245 24 152; 246 25 153; 247 26 154; 248 27 155; 249 28 156; 250 29 157;
251 31 158; 252 32 159; 253 34 160; 254 35 161; 255 36 162; 256 37 163;
257 38 164; 258 39 165; 259 40 166; 260 41 167; 261 42 168; 262 43 169;
263 44 170; 264 45 171; 265 46 172; 266 57 173; 267 58 174; 268 59 175;
269 60 176; 270 61 177; 271 62 178; 272 63 179; 273 64 180; 274 65 181;
275 66 182; 276 67 183; 277 68 184; 278 69 185; 279 70 186; 280 71 187;
281 72 188; 282 73 189; 283 74 190; 284 75 191; 285 76 192; 286 77 193;
287 78 194; 288 159 157; 289 157 137; 290 137 138; 291 138 139; 292 139 146;
293 146 144; 294 144 147; 295 147 148; 296 148 149; 297 149 150; 298 140 141;
299 141 142; 300 145 143; 301 160 158; 302 158 151; 303 151 152; 304 152 156;
305 156 161; 306 161 162; 307 162 153; 308 153 154; 309 154 155; 310 170 169;
311 169 163; 312 163 164; 313 164 168; 314 168 171; 315 171 172; 316 172 165;
317 165 166; 318 166 167; 319 180 179; 320 179 173; 321 173 174; 322 174 178;
323 178 181; 324 181 182; 325 182 175; 326 175 176; 327 176 177; 328 190 189;
329 189 183; 330 183 184; 331 184 188; 332 188 191; 333 191 192; 334 192 185;
335 185 186; 336 186 187; 337 193 194; 338 151 163; 339 173 183; 340 138 152;
341 152 164; 342 164 174; 343 174 184; 344 140 139; 345 139 156; 346 156 168;
347 168 178; 348 178 188; 349 188 193; 350 141 145; 351 145 146; 352 142 143;
353 143 144; 354 144 161; 355 161 171; 356 171 181; 357 181 191; 358 191 194;
359 147 162; 360 162 172; 361 172 182; 362 182 192; 363 153 165; 364 175 185;
365 154 166; 366 176 186; 367 155 167; 368 177 187; 369 158 169; 370 179 189;
371 160 170; 372 180 190; 373 159 160; 374 157 158; 375 137 151; 376 170 180;
377 169 179; 378 163 173; 379 165 175; 380 166 176; 381 167 177; 382 150 155;
383 149 154; 384 148 153; 385 137 195; 386 138 196; 387 139 197; 388 140 603;
389 141 604; 390 142 200; 391 143 201; 392 144 202; 393 145 203; 394 146 204;
395 147 205; 396 148 206; 397 149 207; 398 150 208; 399 151 209; 400 152 210;
401 153 211; 402 154 212; 403 155 213; 404 156 214; 405 157 215; 406 158 216;
407 159 217; 408 160 218; 409 161 219; 410 162 220; 411 163 221; 412 164 222;

413 165 223; 414 166 224; 415 167 225; 416 168 226; 417 169 227; 418 170 228;
419 171 229; 420 172 230; 421 173 231; 422 174 232; 423 175 233; 424 176 234;
425 177 235; 426 178 236; 427 179 237; 428 180 238; 429 181 239; 430 182 240;
431 183 241; 432 184 242; 433 185 243; 434 186 244; 435 187 245; 436 188 246;
437 189 247; 438 190 248; 439 191 249; 440 192 250; 441 193 251; 442 194 252;
443 217 215; 444 215 195; 445 195 196; 446 196 197; 447 197 204; 448 204 202;
449 202 205; 450 205 206; 451 206 207; 452 207 208; 453 198 199; 454 199 200;
455 203 201; 456 218 216; 457 216 209; 458 209 210; 459 210 214; 460 214 219;
461 219 220; 462 220 211; 463 211 212; 464 212 213; 465 228 227; 466 227 221;
467 221 222; 468 222 226; 469 226 229; 470 229 230; 471 230 223; 472 223 224;
473 224 225; 474 238 237; 475 237 231; 476 231 232; 477 232 236; 478 236 239;
479 239 240; 480 240 233; 481 233 234; 482 234 235; 483 248 247; 484 247 241;
485 241 242; 486 242 246; 487 246 249; 488 249 250; 489 250 243; 490 243 244;
491 244 245; 492 251 252; 493 209 221; 494 231 241; 495 196 210; 496 210 222;
497 222 232; 498 232 242; 499 198 197; 500 197 214; 501 214 226; 502 226 236;
503 236 246; 504 246 251; 505 199 203; 506 203 204; 507 200 201; 508 201 202;
509 202 219; 510 219 229; 511 229 239; 512 239 249; 513 249 252; 514 205 220;
515 220 230; 516 230 240; 517 240 250; 518 211 223; 519 233 243; 520 212 224;
521 234 244; 522 213 225; 523 235 245; 524 216 227; 525 237 247; 526 218 228;
527 238 248; 528 217 218; 529 215 216; 530 195 209; 531 228 238; 532 227 237;
533 221 231; 534 223 233; 535 224 234; 536 225 235; 537 208 213; 538 207 212;
539 206 211; 540 195 253; 541 196 254; 542 197 255; 543 198 605; 544 199 606;
545 200 258; 546 201 259; 547 202 260; 548 203 261; 549 204 262; 550 205 263;
551 206 264; 552 207 265; 553 208 266; 554 209 267; 555 210 268; 556 211 269;
557 212 270; 558 213 271; 559 214 272; 560 215 273; 561 216 274; 562 217 275;
563 218 276; 564 219 277; 565 220 278; 566 221 279; 567 222 280; 568 223 281;
569 224 282; 570 225 283; 571 226 284; 572 227 285; 573 228 286; 574 229 287;
575 230 288; 576 231 289; 577 232 290; 578 233 291; 579 234 292; 580 235 293;
581 236 294; 582 237 295; 583 238 296; 584 239 297; 585 240 298; 586 241 299;
587 242 300; 588 243 301; 589 244 302; 590 245 303; 591 246 304; 592 247 305;
593 248 306; 594 249 307; 595 250 308; 596 251 309; 597 252 310; 598 275 273;
599 273 253; 600 253 254; 601 254 255; 602 255 262; 603 262 260; 604 260 263;
605 263 264; 606 264 265; 607 265 266; 608 256 257; 609 257 258; 610 261 259;
611 276 274; 612 274 267; 613 267 268; 614 268 272; 615 272 277; 616 277 278;
617 278 269; 618 269 270; 619 270 271; 620 286 285; 621 285 279; 622 279 280;
623 280 284; 624 284 287; 625 287 288; 626 288 281; 627 281 282; 628 282 283;
629 296 295; 630 295 289; 631 289 290; 632 290 294; 633 294 297; 634 297 298;
635 298 291; 636 291 292; 637 292 293; 638 306 305; 639 305 299; 640 299 300;
641 300 304; 642 304 307; 643 307 308; 644 308 301; 645 301 302; 646 302 303;
647 309 310; 648 267 279; 649 289 299; 650 254 268; 651 268 280; 652 280 290;
653 290 300; 654 256 255; 655 255 272; 656 272 284; 657 284 294; 658 294 304;
659 304 309; 660 257 261; 661 261 262; 662 258 259; 663 259 260; 664 260 277;
665 277 287; 666 287 297; 667 297 307; 668 307 310; 669 263 278; 670 278 288;
671 288 298; 672 298 308; 673 269 281; 674 291 301; 675 270 282; 676 292 302;
677 271 283; 678 293 303; 679 274 285; 680 295 305; 681 276 286; 682 296 306;
683 275 276; 684 273 274; 685 253 267; 686 286 296; 687 285 295; 688 279 289;
689 281 291; 690 282 292; 691 283 293; 692 266 271; 693 265 270; 694 264 269;
695 253 311; 696 254 312; 697 255 313; 698 256 607; 699 257 608; 700 258 316;
701 259 317; 702 260 318; 703 261 319; 704 262 320; 705 263 321; 706 264 322;
707 265 323; 708 266 324; 709 267 325; 710 268 326; 711 269 327; 712 270 328;

713 271 329; 714 272 330; 715 273 331; 716 274 332; 717 275 333; 718 276 334;
719 277 335; 720 278 336; 721 279 337; 722 280 338; 723 281 339; 724 282 340;
725 283 341; 726 284 342; 727 285 343; 728 286 344; 729 287 345; 730 288 346;
731 289 347; 732 290 348; 733 291 349; 734 292 350; 735 293 351; 736 294 352;
737 295 353; 738 296 354; 739 297 355; 740 298 356; 741 299 357; 742 300 358;
743 301 359; 744 302 360; 745 303 361; 746 304 362; 747 305 363; 748 306 364;
749 307 365; 750 308 366; 751 309 367; 752 310 368; 753 333 331; 754 331 311;
755 311 312; 756 312 313; 757 313 320; 758 320 318; 759 318 321; 760 321 322;
761 322 323; 762 323 324; 763 314 315; 764 315 316; 765 319 317; 766 334 332;
767 332 325; 768 325 326; 769 326 330; 770 330 335; 771 335 336; 772 336 327;
773 327 328; 774 328 329; 775 344 343; 776 343 337; 777 337 338; 778 338 342;
779 342 345; 780 345 346; 781 346 339; 782 339 340; 783 340 341; 784 354 353;
785 353 347; 786 347 348; 787 348 352; 788 352 355; 789 355 356; 790 356 349;
791 349 350; 792 350 351; 793 364 363; 794 363 357; 795 357 358; 796 358 362;
797 362 365; 798 365 366; 799 366 359; 800 359 360; 801 360 361; 802 367 368;
803 325 337; 804 347 357; 805 312 326; 806 326 338; 807 338 348; 808 348 358;
809 314 313; 810 313 330; 811 330 342; 812 342 352; 813 352 362; 814 362 367;
815 315 319; 816 319 320; 817 316 317; 818 317 318; 819 318 335; 820 335 345;
821 345 355; 822 355 365; 823 365 368; 824 321 336; 825 336 346; 826 346 356;
827 356 366; 828 327 339; 829 349 359; 830 328 340; 831 350 360; 832 329 341;
833 351 361; 834 332 343; 835 353 363; 836 334 344; 837 354 364; 838 333 334;
839 331 332; 840 311 325; 841 344 354; 842 343 353; 843 337 347; 844 339 349;
845 340 350; 846 341 351; 847 324 329; 848 323 328; 849 322 327; 850 311 369;
851 312 370; 852 313 371; 853 314 609; 854 315 610; 855 316 374; 856 317 375;
857 318 376; 858 319 377; 859 320 378; 860 321 379; 861 322 380; 862 323 381;
863 324 382; 864 325 383; 865 326 384; 866 327 385; 867 328 386; 868 329 387;
869 330 388; 870 331 389; 871 332 390; 872 333 391; 873 334 392; 874 335 393;
875 336 394; 876 337 395; 877 338 396; 878 339 397; 879 340 398; 880 341 399;
881 342 400; 882 343 401; 883 344 402; 884 345 403; 885 346 404; 886 347 405;
887 348 406; 888 349 407; 889 350 408; 890 351 409; 891 352 410; 892 353 411;
893 354 412; 894 355 413; 895 356 414; 896 357 415; 897 358 416; 898 359 417;
899 360 418; 900 361 419; 901 362 420; 902 363 421; 903 364 422; 904 365 423;
905 366 424; 906 367 425; 907 368 426; 908 391 389; 909 389 369; 910 369 370;
911 370 371; 912 371 378; 913 378 376; 914 376 379; 915 379 380; 916 380 381;
917 381 382; 918 372 373; 919 373 374; 920 377 375; 921 392 390; 922 390 383;
923 383 384; 924 384 388; 925 388 393; 926 393 394; 927 394 385; 928 385 386;
929 386 387; 930 402 401; 931 401 395; 932 395 396; 933 396 400; 934 400 403;
935 403 404; 936 404 397; 937 397 398; 938 398 399; 939 412 411; 940 411 405;
941 405 406; 942 406 410; 943 410 413; 944 413 414; 945 414 407; 946 407 408;
947 408 409; 948 422 421; 949 421 415; 950 415 416; 951 416 420; 952 420 423;
953 423 424; 954 424 417; 955 417 418; 956 418 419; 957 425 426; 958 383 395;
959 405 415; 960 370 384; 961 384 396; 962 396 406; 963 406 416; 964 372 371;
965 371 388; 966 388 400; 967 400 410; 968 410 420; 969 420 425; 970 373 377;
971 377 378; 972 374 375; 973 375 376; 974 376 393; 975 393 403; 976 403 413;
977 413 423; 978 423 426; 979 379 394; 980 394 404; 981 404 414; 982 414 424;
983 385 397; 984 407 417; 985 386 398; 986 408 418; 987 387 399; 988 409 419;
989 390 401; 990 411 421; 991 392 402; 992 412 422; 993 391 392; 994 389 390;
995 369 383; 996 402 412; 997 401 411; 998 395 405; 999 397 407; 1000 398 408;
1001 399 409; 1002 382 387; 1003 381 386; 1004 380 385; 1005 369 427;
1006 370 428; 1007 371 429; 1008 372 611; 1009 373 612; 1010 374 432;

1011 375 433; 1012 376 434; 1013 377 435; 1014 378 436; 1015 379 437;
1016 380 438; 1017 381 439; 1018 382 440; 1019 383 441; 1020 384 442;
1021 385 443; 1022 386 444; 1023 387 445; 1024 388 446; 1025 389 447;
1026 390 448; 1027 391 449; 1028 392 450; 1029 393 451; 1030 394 452;
1031 395 453; 1032 396 454; 1033 397 455; 1034 398 456; 1035 399 457;
1036 400 458; 1037 401 459; 1038 402 460; 1039 403 461; 1040 404 462;
1041 405 463; 1042 406 464; 1043 407 465; 1044 408 466; 1045 409 467;
1046 410 468; 1047 411 469; 1048 412 470; 1049 413 471; 1050 414 472;
1051 415 473; 1052 416 474; 1053 417 475; 1054 418 476; 1055 419 477;
1056 420 478; 1057 421 479; 1058 422 480; 1059 423 481; 1060 424 482;
1061 425 483; 1062 426 484; 1063 449 447; 1064 447 427; 1065 427 428;
1066 428 429; 1067 429 436; 1068 436 434; 1069 434 437; 1070 437 438;
1071 438 439; 1072 439 440; 1073 430 431; 1074 431 432; 1075 435 433;
1076 450 448; 1077 448 441; 1078 441 442; 1079 442 446; 1080 446 451;
1081 451 452; 1082 452 443; 1083 443 444; 1084 444 445; 1085 460 459;
1086 459 453; 1087 453 454; 1088 454 458; 1089 458 461; 1090 461 462;
1091 462 455; 1092 455 456; 1093 456 457; 1094 470 469; 1095 469 463;
1096 463 464; 1097 464 468; 1098 468 471; 1099 471 472; 1100 472 465;
1101 465 466; 1102 466 467; 1103 480 479; 1104 479 473; 1105 473 474;
1106 474 478; 1107 478 481; 1108 481 482; 1109 482 475; 1110 475 476;
1111 476 477; 1112 483 484; 1113 441 453; 1114 463 473; 1115 428 442;
1116 442 454; 1117 454 464; 1118 464 474; 1119 430 429; 1120 429 446;
1121 446 458; 1122 458 468; 1123 468 478; 1124 478 483; 1125 431 435;
1126 435 436; 1127 432 433; 1128 433 434; 1129 434 451; 1130 451 461;
1131 461 471; 1132 471 481; 1133 481 484; 1134 437 452; 1135 452 462;
1136 462 472; 1137 472 482; 1138 443 455; 1139 465 475; 1140 444 456;
1141 466 476; 1142 445 457; 1143 467 477; 1144 448 459; 1145 469 479;
1146 450 460; 1147 470 480; 1148 449 450; 1149 447 448; 1150 427 441;
1151 460 470; 1152 459 469; 1153 453 463; 1154 455 465; 1155 456 466;
1156 457 467; 1157 440 445; 1158 439 444; 1159 438 443; 1160 427 485;
1161 428 486; 1162 429 487; 1163 430 613; 1164 431 614; 1165 432 490;
1166 433 491; 1167 434 492; 1168 435 493; 1169 436 494; 1170 437 495;
1171 438 496; 1172 439 497; 1173 440 498; 1174 441 499; 1175 442 500;
1176 443 501; 1177 444 502; 1178 445 503; 1179 446 504; 1180 447 505;
1181 448 506; 1182 449 507; 1183 450 508; 1184 451 509; 1185 452 510;
1186 453 511; 1187 454 512; 1188 455 513; 1189 456 514; 1190 457 515;
1191 458 516; 1192 459 517; 1193 460 518; 1194 461 519; 1195 462 520;
1196 463 521; 1197 464 522; 1198 465 523; 1199 466 524; 1200 467 525;
1201 468 526; 1202 469 527; 1203 470 528; 1204 471 529; 1205 472 530;
1206 473 531; 1207 474 532; 1208 475 533; 1209 476 534; 1210 477 535;
1211 478 536; 1212 479 537; 1213 480 538; 1214 481 539; 1215 482 540;
1216 483 541; 1217 484 542; 1218 507 505; 1219 505 485; 1220 485 486;
1221 486 487; 1222 487 494; 1223 494 492; 1224 492 495; 1225 495 496;
1226 496 497; 1227 497 498; 1228 488 489; 1229 489 490; 1230 493 491;
1231 508 506; 1232 506 499; 1233 499 500; 1234 500 504; 1235 504 509;
1236 509 510; 1237 510 501; 1238 501 502; 1239 502 503; 1240 518 517;
1241 517 511; 1242 511 512; 1243 512 516; 1244 516 519; 1245 519 520;
1246 520 513; 1247 513 514; 1248 514 515; 1249 528 527; 1250 527 521;
1251 521 522; 1252 522 526; 1253 526 529; 1254 529 530; 1255 530 523;
1256 523 524; 1257 524 525; 1258 538 537; 1259 537 531; 1260 531 532;

1261 532 536; 1262 536 539; 1263 539 540; 1264 540 533; 1265 533 534;
1266 534 535; 1267 541 542; 1268 499 511; 1269 521 531; 1270 486 500;
1271 500 512; 1272 512 522; 1273 522 532; 1274 488 487; 1275 487 504;
1276 504 516; 1277 516 526; 1278 526 536; 1279 536 541; 1280 489 493;
1281 493 494; 1282 490 491; 1283 491 492; 1284 492 509; 1285 509 519;
1286 519 529; 1287 529 539; 1288 539 542; 1289 495 510; 1290 510 520;
1291 520 530; 1292 530 540; 1293 501 513; 1294 523 533; 1295 502 514;
1296 524 534; 1297 503 515; 1298 525 535; 1299 506 517; 1300 527 537;
1301 508 518; 1302 528 538; 1303 507 508; 1304 505 506; 1305 485 499;
1306 518 528; 1307 517 527; 1308 511 521; 1309 513 523; 1310 514 524;
1311 515 525; 1312 498 503; 1313 497 502; 1314 496 501; 1693 601 140;
1694 602 141; 1695 603 198; 1696 604 199; 1697 605 256; 1698 606 257;
1699 607 314; 1700 608 315; 1701 609 372; 1702 610 373; 1703 611 430;
1704 612 431; 1705 613 488; 1706 614 489; 1707 614 613; 1708 612 611;
1709 610 609; 1710 608 607; 1711 606 605; 1712 604 603; 1713 602 601;

ELEMENT INCIDENCES SHELL
1373 32 29 31 34; 1374 29 2 23 31; 1375 2 3 24 23; 1376 3 4 28 24;
1377 4 11 6 5; 1378 11 9 8 10; 1379 9 35 28 4; 1380 9 12 36 35;
1381 12 13 25 36; 1382 13 14 26 25; 1383 14 15 27 26; 1384 6 7 8 10;
1385 34 31 43 44; 1386 31 23 37 43; 1387 23 24 38 37; 1388 24 28 42 38;
1389 28 35 45 42; 1390 35 36 46 45; 1391 36 25 39 46; 1392 25 26 40 39;
1393 26 27 41 40; 1394 44 43 63 64; 1395 43 37 57 63; 1396 37 38 58 57;
1397 38 42 62 58; 1398 42 45 65 62; 1399 45 46 66 65; 1400 46 39 59 66;
1401 39 40 60 59; 1402 40 41 61 60; 1403 64 63 73 74; 1404 63 57 67 73;
1405 57 58 68 67; 1406 58 62 72 68; 1407 62 65 75 72; 1408 65 66 76 75;
1409 66 59 69 76; 1410 59 60 70 69; 1411 60 61 71 70; 1412 72 75 78 77;
1413 159 157 158 160; 1414 157 137 151 158; 1415 137 138 152 151;
1416 138 139 156 152; 1417 139 146 141 140; 1418 146 144 143 145;
1419 144 161 156 139; 1420 144 147 162 161; 1421 147 148 153 162;
1422 148 149 154 153; 1423 149 150 155 154; 1424 141 142 143 145;
1425 160 158 169 170; 1426 158 151 163 169; 1427 151 152 164 163;
1428 152 156 168 164; 1429 156 161 171 168; 1430 161 162 172 171;
1431 162 153 165 172; 1432 153 154 166 165; 1433 154 155 167 166;
1434 170 169 179 180; 1435 169 163 173 179; 1436 163 164 174 173;
1437 164 168 178 174; 1438 168 171 181 178; 1439 171 172 182 181;
1440 172 165 175 182; 1441 165 166 176 175; 1442 166 167 177 176;
1443 180 179 189 190; 1444 179 173 183 189; 1445 173 174 184 183;
1446 174 178 188 184; 1447 178 181 191 188; 1448 181 182 192 191;
1449 182 175 185 192; 1450 175 176 186 185; 1451 176 177 187 186;
1452 188 191 194 193; 1453 217 215 216 218; 1454 215 195 209 216;
1455 195 196 210 209; 1456 196 197 214 210; 1457 197 204 199 198;
1458 204 202 201 203; 1459 202 219 214 197; 1460 202 205 220 219;
1461 205 206 211 220; 1462 206 207 212 211; 1463 207 208 213 212;
1464 199 200 201 203; 1465 218 216 227 228; 1466 216 209 221 227;
1467 209 210 222 221; 1468 210 214 226 222; 1469 214 219 229 226;
1470 219 220 230 229; 1471 220 211 223 230; 1472 211 212 224 223;
1473 212 213 225 224; 1474 228 227 237 238; 1475 227 221 231 237;
1476 221 222 232 231; 1477 222 226 236 232; 1478 226 229 239 236;
1479 229 230 240 239; 1480 230 223 233 240; 1481 223 224 234 233;

1482 224 225 235 234; 1483 238 237 247 248; 1484 237 231 241 247;
1485 231 232 242 241; 1486 232 236 246 242; 1487 236 239 249 246;
1488 239 240 250 249; 1489 240 233 243 250; 1490 233 234 244 243;
1491 234 235 245 244; 1492 246 249 252 251; 1493 275 273 274 276;
1494 273 253 267 274; 1495 253 254 268 267; 1496 254 255 272 268;
1497 255 262 257 256; 1498 262 260 259 261; 1499 260 277 272 255;
1500 260 263 278 277; 1501 263 264 269 278; 1502 264 265 270 269;
1503 265 266 271 270; 1504 257 258 259 261; 1505 276 274 285 286;
1506 274 267 279 285; 1507 267 268 280 279; 1508 268 272 284 280;
1509 272 277 287 284; 1510 277 278 288 287; 1511 278 269 281 288;
1512 269 270 282 281; 1513 270 271 283 282; 1514 286 285 295 296;
1515 285 279 289 295; 1516 279 280 290 289; 1517 280 284 294 290;
1518 284 287 297 294; 1519 287 288 298 297; 1520 288 281 291 298;
1521 281 282 292 291; 1522 282 283 293 292; 1523 296 295 305 306;
1524 295 289 299 305; 1525 289 290 300 299; 1526 290 294 304 300;
1527 294 297 307 304; 1528 297 298 308 307; 1529 298 291 301 308;
1530 291 292 302 301; 1531 292 293 303 302; 1532 304 307 310 309;
1533 333 331 332 334; 1534 331 311 325 332; 1535 311 312 326 325;
1536 312 313 330 326; 1537 313 320 315 314; 1538 320 318 317 319;
1539 318 335 330 313; 1540 318 321 336 335; 1541 321 322 327 336;
1542 322 323 328 327; 1543 323 324 329 328; 1544 315 316 317 319;
1545 334 332 343 344; 1546 332 325 337 343; 1547 325 326 338 337;
1548 326 330 342 338; 1549 330 335 345 342; 1550 335 336 346 345;
1551 336 327 339 346; 1552 327 328 340 339; 1553 328 329 341 340;
1554 344 343 353 354; 1555 343 337 347 353; 1556 337 338 348 347;
1557 338 342 352 348; 1558 342 345 355 352; 1559 345 346 356 355;
1560 346 339 349 356; 1561 339 340 350 349; 1562 340 341 351 350;
1563 354 353 363 364; 1564 353 347 357 363; 1565 347 348 358 357;
1566 348 352 362 358; 1567 352 355 365 362; 1568 355 356 366 365;
1569 356 349 359 366; 1570 349 350 360 359; 1571 350 351 361 360;
1572 362 365 368 367; 1573 391 389 390 392; 1574 389 369 383 390;
1575 369 370 384 383; 1576 370 371 388 384; 1577 371 378 373 372;
1578 378 376 375 377; 1579 376 393 388 371; 1580 376 379 394 393;
1581 379 380 385 394; 1582 380 381 386 385; 1583 381 382 387 386;
1584 373 374 375 377; 1585 392 390 401 402; 1586 390 383 395 401;
1587 383 384 396 395; 1588 384 388 400 396; 1589 388 393 403 400;
1590 393 394 404 403; 1591 394 385 397 404; 1592 385 386 398 397;
1593 386 387 399 398; 1594 402 401 411 412; 1595 401 395 405 411;
1596 395 396 406 405; 1597 396 400 410 406; 1598 400 403 413 410;
1599 403 404 414 413; 1600 404 397 407 414; 1601 397 398 408 407;
1602 398 399 409 408; 1603 412 411 421 422; 1604 411 405 415 421;
1605 405 406 416 415; 1606 406 410 420 416; 1607 410 413 423 420;
1608 413 414 424 423; 1609 414 407 417 424; 1610 407 408 418 417;
1611 408 409 419 418; 1612 420 423 426 425; 1613 449 447 448 450;
1614 447 427 441 448; 1615 427 428 442 441; 1616 428 429 446 442;
1617 429 436 431 430; 1618 436 434 433 435; 1619 434 451 446 429;
1620 434 437 452 451; 1621 437 438 443 452; 1622 438 439 444 443;
1623 439 440 445 444; 1624 431 432 433 435; 1625 450 448 459 460;
1626 448 441 453 459; 1627 441 442 454 453; 1628 442 446 458 454;
1629 446 451 461 458; 1630 451 452 462 461; 1631 452 443 455 462;

1632 443 444 456 455; 1633 444 445 457 456; 1634 460 459 469 470;
1635 459 453 463 469; 1636 453 454 464 463; 1637 454 458 468 464;
1638 458 461 471 468; 1639 461 462 472 471; 1640 462 455 465 472;
1641 455 456 466 465; 1642 456 457 467 466; 1643 470 469 479 480;
1644 469 463 473 479; 1645 463 464 474 473; 1646 464 468 478 474;
1647 468 471 481 478; 1648 471 472 482 481; 1649 472 465 475 482;
1650 465 466 476 475; 1651 466 467 477 476; 1652 478 481 484 483;
1653 507 505 506 508; 1654 505 485 499 506; 1655 485 486 500 499;
1656 486 487 504 500; 1657 487 494 489 488; 1658 494 492 491 493;
1659 492 509 504 487; 1660 492 495 510 509; 1661 495 496 501 510;
1662 496 497 502 501; 1663 497 498 503 502; 1664 489 490 491 493;
1665 508 506 517 518; 1666 506 499 511 517; 1667 499 500 512 511;
1668 500 504 516 512; 1669 504 509 519 516; 1670 509 510 520 519;
1671 510 501 513 520; 1672 501 502 514 513; 1673 502 503 515 514;
1674 518 517 527 528; 1675 517 511 521 527; 1676 511 512 522 521;
1677 512 516 526 522; 1678 516 519 529 526; 1679 519 520 530 529;
1680 520 513 523 530; 1681 513 514 524 523; 1682 514 515 525 524;
1683 528 527 537 538; 1684 527 521 531 537; 1685 521 522 532 531;
1686 522 526 536 532; 1687 526 529 539 536; 1688 529 530 540 539;
1689 530 523 533 540; 1690 523 524 534 533; 1691 524 525 535 534;
1692 536 539 542 541;

ELEMENT PROPERTY
1373 TO 1692 THICKNESS 0.125
DEFINE MATERIAL START
ISOTROPIC CONCRETE
E 2.17185e+007
POISSON 0.17
DENSITY 23.5616
ALPHA 1e-005
DAMP 0.05
G 9.28139e+006
TYPE CONCRETE
STRENGTH FCU 25
END DEFINE MATERIAL

MEMBER PROPERTY
1 TO 13 19 TO 36 42 TO 60 63 66 TO 76 86 TO 89 92 95 98 101 104 107 110 113 -
116 119 TO 131 288 TO 349 359 TO 384 443 TO 504 514 TO 539 598 TO 659 669 -
670 TO 694 753 TO 814 824 TO 849 908 TO 969 979 TO 1004 1063 TO 1124 1134 -
1135 TO 1159 1218 TO 1279 1289 TO 1314 1707 TO 1713 PRIS YD 0.35 ZD 0.23
MEMBER PROPERTY
77 TO 85 350 TO 358 505 TO 513 660 TO 668 815 TO 823 970 TO 978 1125 TO 1133 -
1280 TO 1288 PRIS YD 0.35 ZD 0.3
MEMBER PROPERTY
132 134 TO 141 143 TO 145 147 149 TO 158 160 TO 166 168 169 171 TO 177 181 -
182 TO 189 230 232 TO 239 241 TO 243 245 247 TO 256 258 TO 264 266 267 269 -
270 TO 275 279 TO 287 385 387 TO 394 396 TO 398 400 402 TO 411 413 TO 419 -
421 422 424 TO 430 434 TO 442 540 542 TO 549 551 TO 553 555 557 TO 566 568 -
569 TO 574 576 577 579 TO 585 589 TO 597 695 697 TO 704 706 TO 708 710 712 -

```
713 TO 721 723 TO 729 731 732 734 TO 740 744 TO 752 850 852 TO 859 -
861 TO 863 865 867 TO 876 878 TO 884 886 887 889 TO 895 899 TO 907 1005 1007 -
1008 TO 1014 1016 TO 1018 1020 1022 TO 1031 1033 TO 1039 1041 1042 -
1044 TO 1050 1054 TO 1062 1160 1162 TO 1169 1171 TO 1173 1175 1177 TO 1186 -
1188 TO 1194 1196 1197 1199 TO 1205 1209 TO 1217 1693 TO 1705 -
1706 PRIS YD 0.3 ZD 0.6
133 142 146 148 159 167 170 178 TO 180 231 240 244 246 257 265 268 -
276 TO 278 386 395 399 401 412 420 423 431 TO 433 541 550 554 556 567 575 -
578 586 TO 588 696 705 709 711 722 730 733 741 TO 743 851 860 864 866 877 -
885 888 896 TO 898 1006 1015 1019 1021 1032 1040 1043 1051 TO 1053 1161 1170 -
1174 1176 1187 1195 1198 1206 TO 1208 PRIS YD 0.6 ZD 0.3
CONSTANTS
MATERIAL CONCRETE ALL
SUPPORTS
79 TO 136 FIXED
DEFINE 1893 LOAD PART4
ZONE 0.16 RF 3 I 1.5 SS 2 ST 1 DM 0.05 DT 2
SELFWEIGHT 1
FLOOR WEIGHT
YRANGE 0 23 FLOAD -2
LOAD 1 LOADTYPE Seismic TITLE EQ+X
1893 LOAD X 1
LOAD 2 LOADTYPE Seismic TITLE EQ-X
1893 LOAD X -1
LOAD 3 LOADTYPE Seismic TITLE EQ+Z
1893 LOAD Z 1
LOAD 4 LOADTYPE Seismic TITLE EQ-Z
1893 LOAD Z -1
LOAD 5 LOADTYPE Dead TITLE DL
SELFWEIGHT Y -1
MEMBER LOAD
1 TO 13 19 TO 36 42 TO 60 63 66 TO 89 92 95 98 101 104 107 110 113 116 119 -
120 TO 189 230 TO 1217 1693 TO 1704 1707 TO 1713 UNI GY -14
1218 TO 1314 UNI GY -6
LOAD 6 LOADTYPE Live TITLE LL
FLOOR LOAD
YRANGE 0 23 FLOAD -2 GY
LOAD COMB 7 1.5DL+1.5LL
5 1.5 6 1.5
LOAD COMB 8 1.2DL+1.2LL+1.2EL
5 1.2 6 1.2 1 1.2 2 1.2 3 1.2 4 1.2
LOAD COMB 9 1.5DL+1.5EL
5 1.5 1 1.5 2 1.5 3 1.5 4 1.5
PERFORM ANALYSIS PRINT ALL
START CONCRETE DESIGN
CODE INDIAN
CLEAR 0.015 MEMB 1 TO 13 19 TO 36 42 TO 60 63 66 TO 89 92 95 98 101 104 107 -
110 113 116 119 TO 189 230 TO 1314 1373 TO 1652 1654 TO 1713
TORSION 0 ALL
TRACK 2 ALL
```

```
METHOD 1 MEMB 132 TO 189 230 TO 287 385 TO 442 540 TO 597 695 TO 752 -
850 TO 907 1005 TO 1062 1160 TO 1217 1693 TO 1706
RATIO 4 MEMB 132 TO 189 230 TO 287 385 TO 442 540 TO 597 695 TO 752 -
850 TO 907 1005 TO 1062 1160 TO 1217 1693 TO 1706
FC 30000 MEMB 1 TO 13 19 TO 36 42 TO 60 63 66 TO 89 92 95 98 101 104 107 110 -
113 116 119 TO 189 230 TO 1314 1373 TO 1652 1654 TO 1713
FYMAIN 415000 MEMB 1 TO 13 19 TO 36 42 TO 60 63 66 TO 89 92 95 98 101 104 -
107 110 113 116 119 TO 131 288 TO 384 443 TO 539 598 TO 694 753 TO 849 908 -
909 TO 1004 1063 TO 1159 1218 TO 1314 1707 TO 1713
FYMAIN 500000 MEMB 132 TO 189 230 TO 287 385 TO 442 540 TO 597 695 TO 752 -
850 TO 907 1005 TO 1062 1160 TO 1217 1693 TO 1706
DESIGN BEAM 1 TO 13 19 TO 36 42 TO 60 63 66 TO 89 92 95 98 101 104 107 110 -
113 116 119 TO 131 288 TO 384 443 TO 539 598 TO 694 753 TO 849 908 TO 1004 -
1063 TO 1159 1218 TO 1314 1707 TO 1713
DESIGN COLUMN 132 TO 189 230 TO 287 385 TO 442 540 TO 597 695 TO 752 -
850 TO 907 1005 TO 1062 1160 TO 1217 1693 TO 1706
DESIGN ELEMENT 1373 TO 1652 1654 TO 1692
CONCRETE TAKE
MINMAIN 16 MEMB 132 TO 189 230 TO 287 385 TO 442 540 TO 597 695 TO 752 850 -
851 TO 907 1005 TO 1062 1160 TO 1217 1693 TO 1706
END CONCRETE DESIGN
PERFORM ANALYSIS PRINT ALL
FINISH
```

7.2 ANALYSIS OF THE STRUCTURE

GENERAL

The frames were identified from the building and the corresponding loads were calculated using IS 875 (part-1), (part-2). The analysis of frames for the vertical forces was carried by STAAD Pro Software.

ANALYSIS OF THE FRAMES

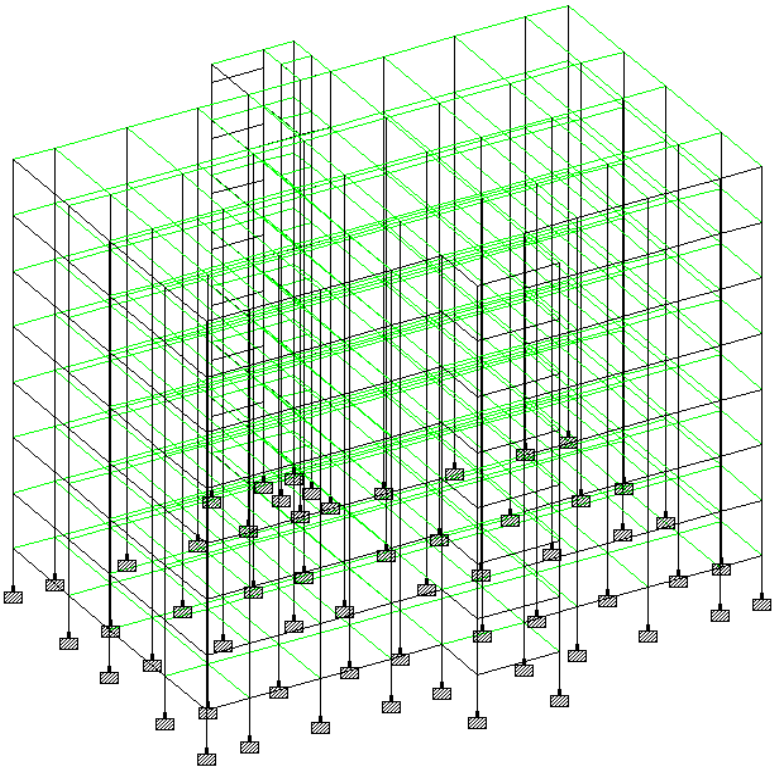

Figure no 7.1

7.3. 2-DIMENSIONAL VIEW OF THE STRUCURE

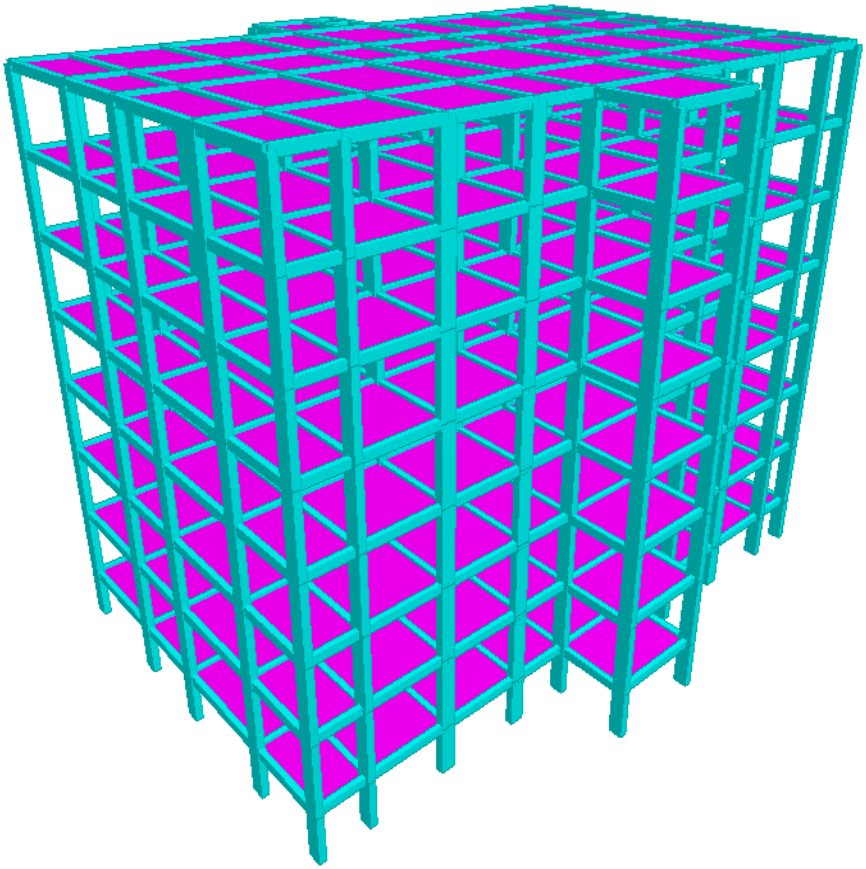

Figure No. 7.2

7.4. NODES OF THE STRUCTURE

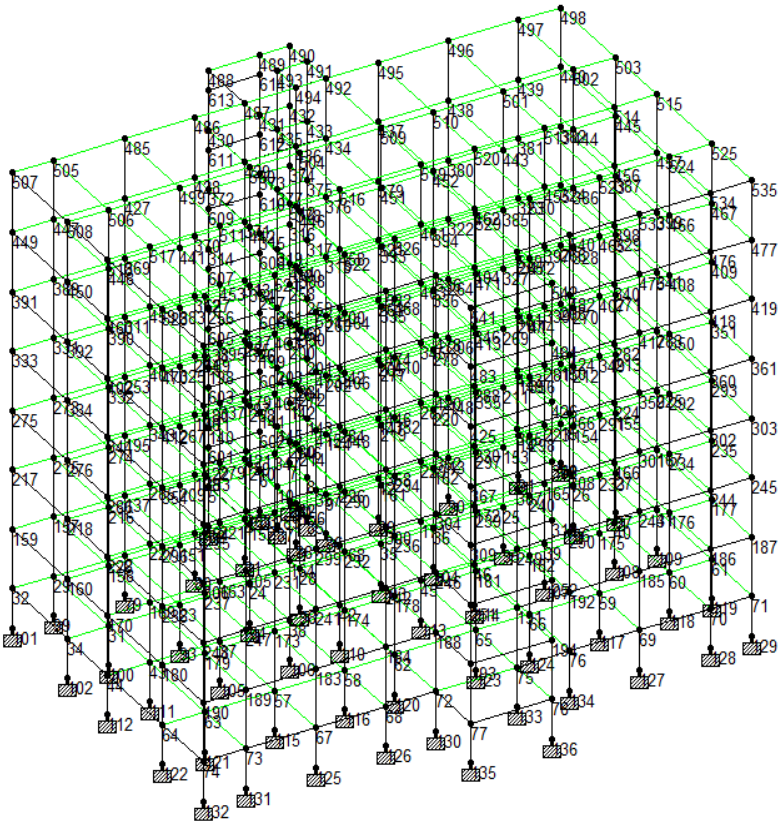

Figure no 7.3

7.5. SHEAR & REINFORCEMENT

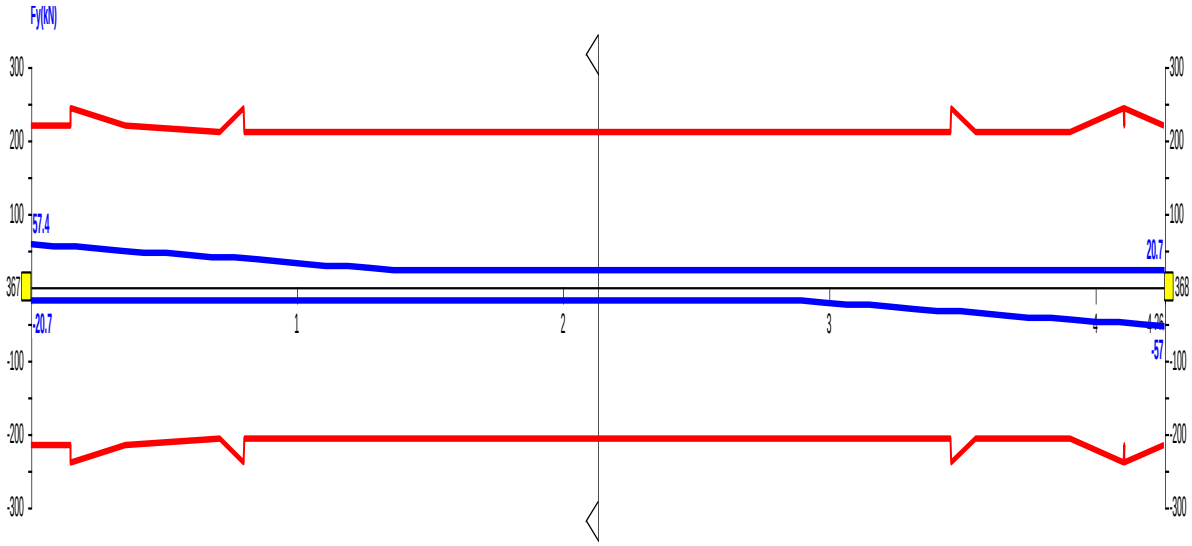

Figure No 7.4

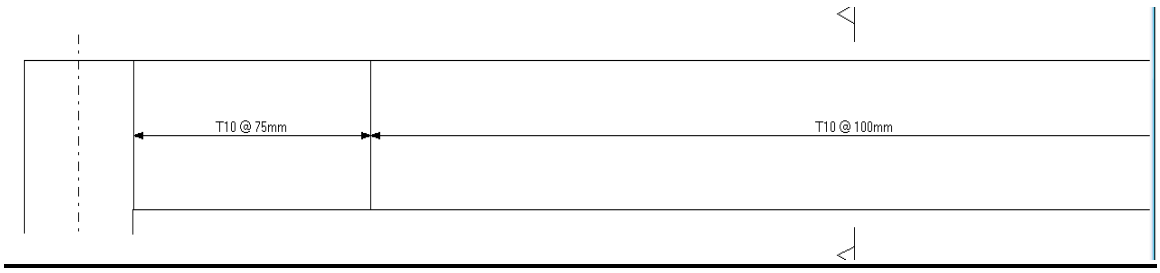

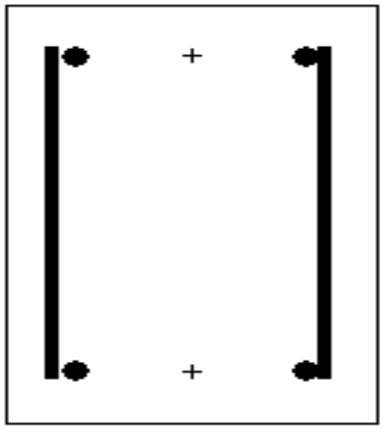

Figure No 7.5 & 7.6

7.6. BENDING & ITS REINFORCEMENT

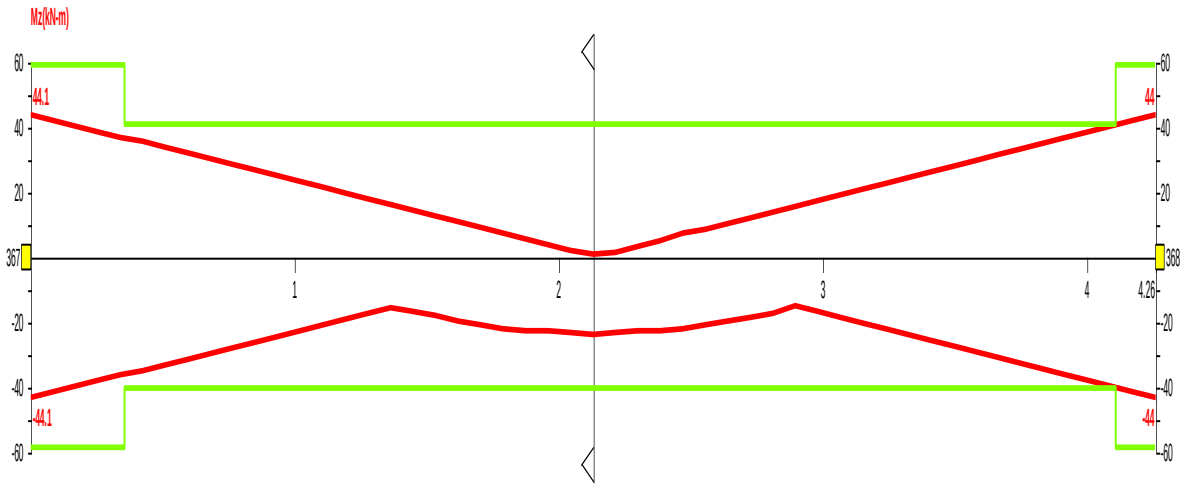

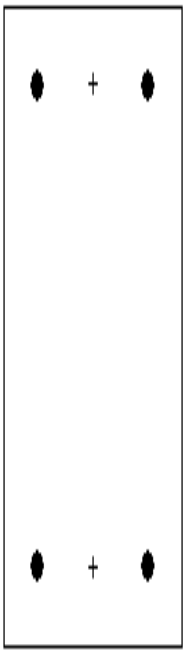

Layer 1 (Top) | Layer 2 (Top) | Layer 1 (Bot) | Layer 2 (Bot)

Serial No.	Bar Dia	X Dist cm	Starting Distance m	Ending Distance m
1	16	11.5	0.001	0.355
2	16	18.7	0.001	4.259
3	16	4.3	0.001	4.259
4	16	11.5	4.110	4.259

Figure No 7.7 & 7.8

7.7. PROPERTIES OF STRUCTURE

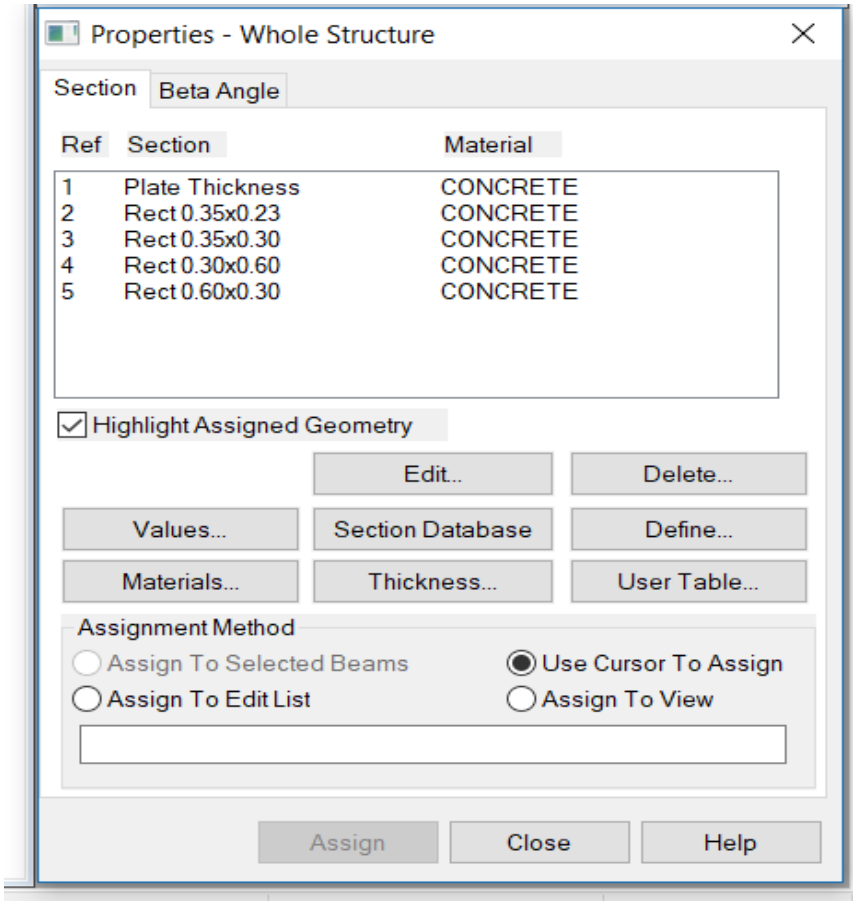

Figure No 7.9

7.8.LOAD & DEFINITION

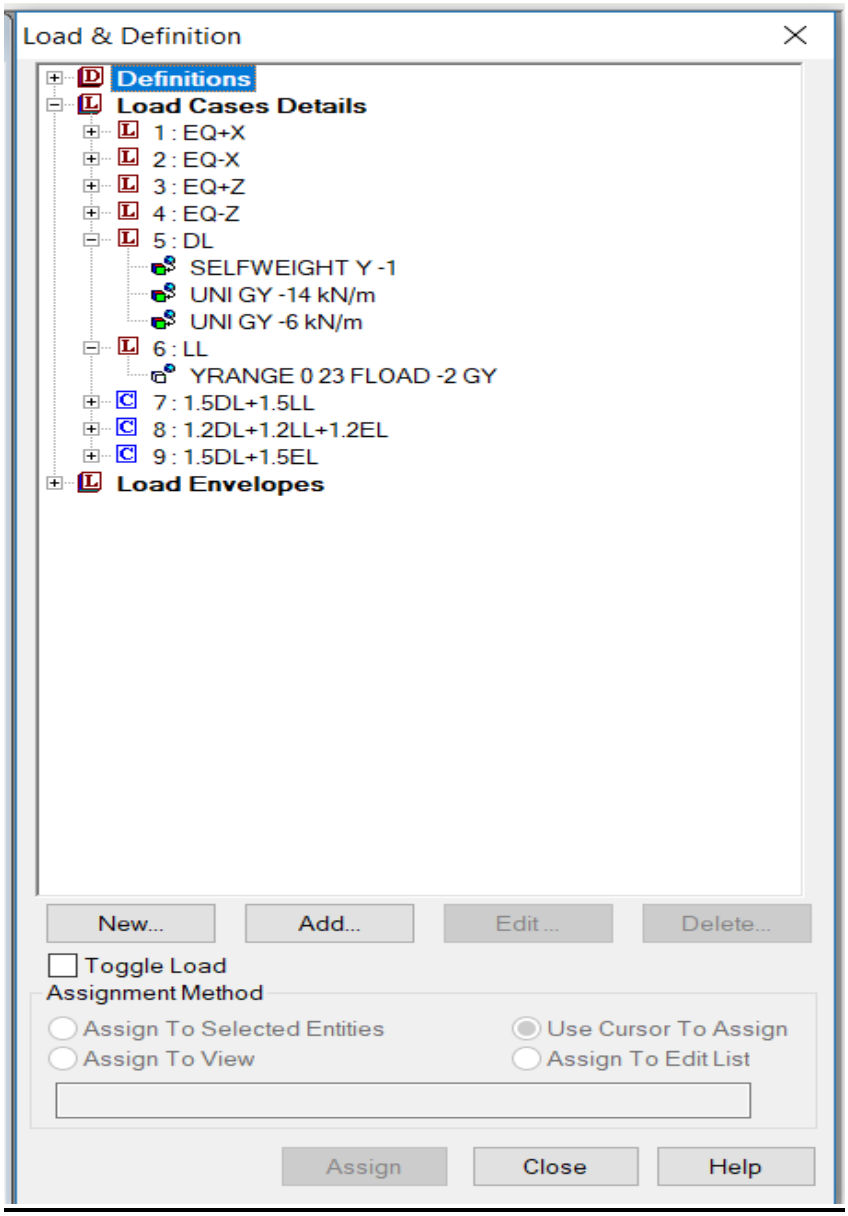

Figure No 7.10

8. MANUAL STRUCTURAL DESIGN

MANUAL STRUCTURAL DESIGN

DESIGN METHODOLOGY

A reinforced concrete structure should be so designed that it fulfils its intended purpose during its life time with:

1. Adequate safety, in terms of strength and stability.
2. Adequate serviceability in terms of stiffness and durability.
3. Reasonable economy.

Thus, all the structure must be designed by one of the following two methods:

1. The method of theoretical compulsion using accepted theories / procedures approved by the code of practices.
2. The method of experimental investigation on models or full-size structures or elements.

The following are used for the design of reinforced concrete structures / elements:

1. Working Stress Method (WSM).
2. Ultimate Load Method (ULM).
3. Limit State Method (LSM).

In this project, we are used limit state method of design. So, let us discuss the concept of limit state method.

LIMIT STATE METHOD (LSM)

In this method of design based on limit state concept, the structure shall be designed to withstand safely all loads liable to act on it throughout its life; it shall also satisfy the serviceability requirements, such as limitations on deflection and cracking.

The acceptable limit for the safety and serviceability requirements before failure occurs is called a **Limit State**. The aim of design is the achieves acceptable probabilities that the structure will not the structure will not become unfit for which it is intended, that is, that it will not reach a limit state.

All relevant limit states shall be considered in design to ensure an adequate degree of safety and serviceability. In general, the structure shall be designed on the basis of the most critical limit state and shall be checked for other limit states.

For ensuring the above objective, the design should be based on characteristic values for materials strength and applied loads, which consider the variations in the material strengths and in the loads to be supported.

The characteristic values should be based on statistical data if available; where such data are not available. They should be based on experience. The design values are derived from the characteristic values through the use of partial safety factors, one for material strength and other for loads. In the absence of special considerations, these factors should have the values given in IS:456-2000 clause 36. According to the material, the type of loading and the limit state considered.

The following two categories of limit state are considered to design.

Limit State of Collapse

The limit state of collapse of the structure or part of a structure could be assessed from rupture of one or more critical sections and buckling due to elastic or plastic instability (including the effects of sway where appropriate) or overturning. The resistance to bending, shear, torsion and axial loads at every section shall not be less than the appropriate value at that section produced by the probable most unfavorable combination of loads and the structure using the appropriate partial safety factor.

Limit State of Serviceability

Deflection

Limiting values of deflections are given in IS:456-2000 clause 23.2

Cracking

Cracking of concrete should not adversely affect the appearance or durability of the structure; the acceptable limits of cracking would vary with the type of structure and environment. Where specific attention is required limit the designed crack width to a particular value, crack width calculation may be done using formula given in Annex F (IS:456-2000).

The surface width of the crack should not, in general, exceed 0.3 mm in members where cracking is not harmful and does not have any serious adverse effect upon the preservation of reinforcing steel or upon the durability of the structures. For particularly aggressive environment, such as the severe category in Table 3 (IS:456-2000) the assessed surface width of cracks should not exceed 0.1 mm.

Other Limit States

Structures designed for unusual or special functions shall comply with any relevant additional limit state considered appropriate to the structure.

PARTIAL SAFETY FACTOR

When assessing the strength of a structure or a structural member for the state of collapse, the values of partial safety factor should be taken as 1.5 for concrete and 1.15 for steel.

1. DESIGN OF TWO-WAY SLAB

DATA:

Effective Shorter Span (Lx) = 4.26 m

Effective Longer Span (Ly) = 5.02 m

Width of Support = 0.3m

F_{ck} = 25 N/mm^2

F_y = 415 N/mm^2

STEP 1: TYPE OF SLAB

L_y/L_x = 5.02/4.26

= 1.18< 2

Since Ly/L_x ratio is lesser than 2

The slab should be designed as two-way slab

STEP 2: DEPTH OF SLAB

Clear cover = 25 mm

Adopt effective depth = 125mm

Over all depth (D) = 150mm

STEP 3: LOADS

Self-weight of slab = 3.125 KN/m^2

Live load = 2 KN/m^2

Floor finish = 1 KN/m

Total load = 6.125 KN/m^2

FACTORED LOAD

W_u = (1.5 x6.125)

= 9.1875 KN/m^2

STEP 4: MAXIMUM BENDING MOMENT

From IS 456, Table 26

Short span coefficient

α_x (-ve) = 0.0418 α_x(+ve) = 0.0312

Long span coefficient

α_y(-ve) = 0.032 α_y(+ve) = 0.024

M_{ux}(+ve) = $\alpha_x W l_x^2$

= $(0.0418 \times 9.1875 \times 4.26^2)$

= 6.96 KN-m

M_{ux}(-ve) = $\alpha_x W l_x^2$

= $(0.0312 \times 9.1875 \times 4.26^2)$

= 5.20 KN-m

M_{uy}(+ve) = $\alpha_y W l_x^2$

= $(0.024 \times 9.1875 \times 4.26^2)$

= 4 KN-m

M_{uy}(-ve) = $\alpha_y W l_x^2$

= $(0.032 \times 9.1875 \times 4.26^2)$

= 5.33 KN-m

STEP 5: CHECK FOR DEPTH

From IS 456, Pg.no:96

$M_{u,\,lim}$ = $0.36\frac{x_{u,max}}{d}\left(1-0.42\frac{x_{u,max}}{d}\right)bd^2f_{ck}$

= 0.36x0.48(1-(0.42x0.48)) x1000x125^2x25

$M_{u,\,lim}$ = 53.89x10^6 KN-m

$M_{u,\,actual}$ < $M_{u,\,lim}$

Hence section is under reinforced

Hence safe

STEP 6: CALCULATION OF REINFORCEMENT

SHORTER SPAN

M_u = $0.87\ f_y\ A_{st}\ d\left(1-\frac{A_{st}f_y}{bdf_{ck}}\right)$

6.96x10^6 = 0.87x415x A_{st} x 125x$\left(1-\frac{A_{st}\times 415}{1000\times 125\times 25}\right)$

$A_{st,\,Req}$ = 158 mm^2

Use 10mm ϕ bars,

s_v = $\frac{78.5}{158}\times 1000$

= 490 mm

Provide 10mm ϕ bars @490mmc/c

$A_{st,\,prov}$ = 160 mm^2

Top of support:

$$M_u = 0.87\ f_y\ A_{st}\ d\left(1 - \frac{A_{st} f_y}{b d f_{ck}}\right)$$

$$5.20 \times 10^6 = 0.87 \times 415 \times A_{st} \times 125 \times \left(1 - \frac{A_{st} \times 415}{1000 \times 125 \times 25}\right)$$

$$Ast = 117\ mm^2$$

Use 10mm ϕ bars,

$$s_v = \frac{78.5}{117} \times 1000$$

$$= 650\ mm$$

Provide 10mm ϕ bars @ 650mmc/c

$$A_{st,\ prov} = 121\ mm^2$$

LONGER SPAN

$$M_u = 0.87\ f_y\ A_{st}\ d\left(1 - \frac{A_{st} f_y}{b d f_{ck}}\right)$$

$$4 \times 10^6 = 0.87 \times 415 \times A_{st} \times 125 \times \left(1 - \frac{A_{st} \times 415}{1000 \times 125 \times 25}\right)$$

$$A_{st} = 90\ mm^2$$

Use 10mm ϕ bars,

$$s_v = \frac{78.5}{90} \times 1000$$

$$= 850\ mm$$

Provide 10mm ϕ bars @ 850 mmc/c

$$A_{st,\ prov} = 92.35\ mm^2$$

Top of support:

$$M_u = 0.87\, f_y\, A_{st}\, d\left(1 - \frac{A_{st} f_y}{b d f_{ck}}\right)$$

$$5.33 \times 10^6 = 0.87 \times 415 \times A_{st} \times 125 \times \left(1 - \frac{A_{st} \times 415}{1000 \times 125 \times 25}\right)$$

$$A_{st} = 120 \text{ mm}^2$$

Use 10mm ϕ bars,

$$s_v = \frac{78.5}{120} \times 1000$$

$$= 650 \text{ mm}$$

Provide 10mm ϕ bars @ 650mmc/c

$$A_{st,\,prov} = 121 \text{ mm}^2$$

REINFORCEMENT DETAILS

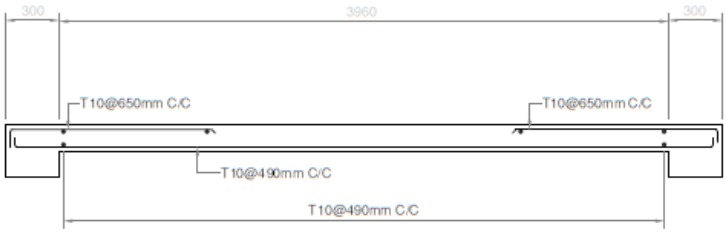

(TWO WAY) (150 THK)

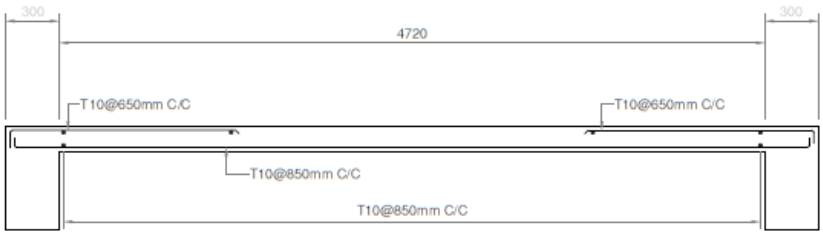

(TWO WAY) (150 THK)

2. DESIGN OF BEAM

STEP 1: GIVEN DATA

Effective Length	=	4.26 m
Assume b	=	230 mm
d	=	325 mm
Cover	=	25 mm
D	=	350 mm
Grade of Concrete	=	M30
Grade of Steel	=	Fe415

Load transferring from slab to the beam

= 10.04 KN/m

STEP 2: LOAD CALCULATION

Dead Load from slab	=	1 KN / m^2
Wall Load	=	0.23 x 20 x 3
	=	14 KN/m
Self-Weight of beam	=	0.23 x 0.35 x 25
	=	2.013 KN/m
Live Load	=	2 KN/m

Total Dead Load (Wd) = 28.05 KN/m

STEP3: ULTIMATE BENDING MOMENTS AND SHEAR FORCE

$M_{u\ support}$ = $1.5\left(\frac{W_d \times l^2}{12}\right)$

= $1.5\left(\frac{28.05 \times 4.26^2}{12}\right)$

= 60 KN-m

STEP 4: CHECK FOR DEPTH

d = $\sqrt{\frac{M_u}{0.138 \times f_{ck} \times b}}$

= $\sqrt{\frac{60 \times 10^6}{0.136 \times 30 \times 230}}$

d = 253 mm

$d_{provided} > d_{required}$

Hence OK

STEP 5: AREA OF STEEL

At Support

M_u = $0.87\ f_y\ A_{st}\ d\left(1 - \frac{A_{st} f_y}{b d f_{ck}}\right)$

$60x10^6$ = $0.87x415x\ A_{st}\ x\ 325x\left(1 - \frac{A_{st} \times 415}{230 \times 325 \times 30}\right)$

$A_{st\ req}$ = 572 mm^2

Provide 3 bars of 16 mm dia. bar

a_s = $(\frac{\pi}{4} \times 16^2)$

= 201 mm^2

$A_{st\ pro}$ = 3 x 201 mm^2

= 603 mm^2

S_v = $\frac{1000 \times a_s}{A_{st}}$

= $\frac{1000 \times 201}{603}$

= 333 mm

Provide 3 nos. of 16 mm dia. bars @ 300 mm c/c

STEP 6: CHECK FOR SHEAR

V_u = 89.61 KN

τ_v = $\frac{V_u}{b \times d}$

= $\frac{89.61 \times 10^3}{230 \times 325}$

= 1.2 N / mm^2

τ_c = 0.6 N / mm^2

$\tau_{c\ max}$ = 3.5 N / mm^2

$\tau_{c\ max} > \tau_v > \tau_c$

Shear Reinforcement should be provided.

V_{us} = $\frac{0.87 \times f_y \times A_{sv} \times d}{S_v}$

S_v = $\frac{0.87 \times 415 \times 157.76 \times 325}{44.85 \times 10^3}$

S_v = 413 mm

Provide 10mm dia. of 2 Legged Stirrups @ 400 mm c/c

STEP 7: CHECK FOR SPACING

$S_v \leq (0.75\ d) = 0.75 \times 325$

$= 244$ mm

$S_v \leq \left(\frac{A_{sv} \times f_y}{0.4 \times b}\right) = \left(\frac{157 \times 415}{0.4 \times 230}\right)$

$= 708.2$ mm

$S_v \leq 300$ mm

Hence ok

<u>REINFORCEMENT DETAILS</u>

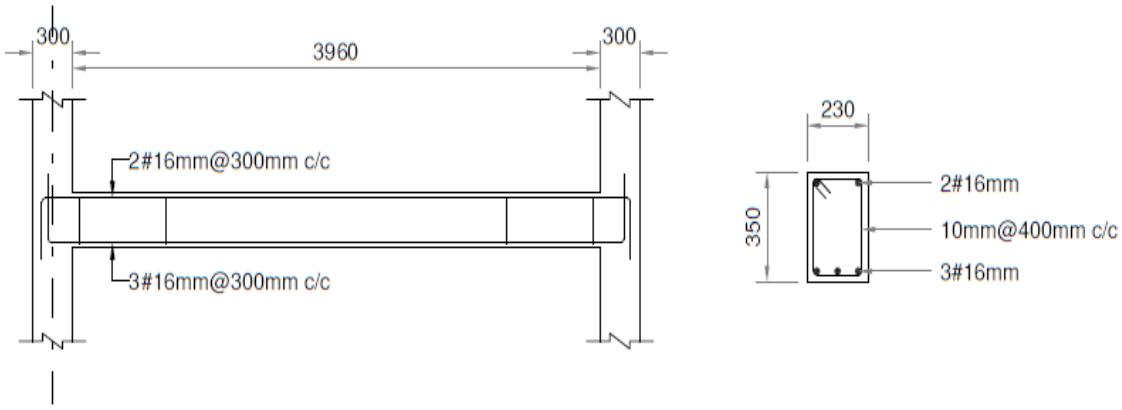

3.DESIGN OF COLUMN:

Use M30 grade concrete and Fe500 grade steel.

Unsupported length, L = 3m

Effective length, l_{eff} = 0.65L = 0.65 x 3000

= 1950 mm

D = 300mm
D_y = 600mm
p_u = 1029.752 KN
M_{ux} = 20.59 KN-m
M_{uy} = 22.82 KN-m
l_{eff}/D = 1950/300 =6.5 < 12

Hence design it as a short column.

AREA OF LONGITUDINAL REINFORCEMENT:

We have

p/f_{ck} = 1.4/30

= 0.05

d'/D = 50/600 =0.08

Chart of d'/D =0.1 will be used

$p_u/(f_{ck}bd)$ =$1029.75 \times 10^3/30X300X600$

= 0.191

Refer to chart 48

$M_u/(f_{ck}\ bd^2)$ = 0.09

M_{UX1} = 291.6 KN-m

M_{UY1} = 145.8 KN-m

CALCULATION OF P_{UZ}

P=1.4; f_y = 500 N/mm^2; fck =30 N/mm^2

Referring to the chart 63 SP-16

P_{UZ}/A_g =18.8

=18.8x300x600 KN

= 3384 KN

P_U/P_{UZ} = 1029.75/3384

= 0.3

M_{UY}/M_{UY1} = 22.82/145.8

= 0.16

M_{UX}/M_{UX1} = 20.56/291.6

= 0.071

Referring to the Chart 64

M_{Ux}/M_{Ux1} =0.9

Hence it is safe

A_S = 1.4X300X600/100

= 2520 mm^2

$A_{S\ provided}$ = 2520 mm^2

Provide 6 bars of 25 mm dia.

LATERAL TIES:

The diameter of transverse reinforcement (lateral ties) is determined from clause 26.5.3.2 of IS - 456 as not less than,

= 25/4

= 6.25mm,

Where ø is the largest ø used as longitudinal reinforcement.

The pitch of the lateral ties as per clause 26.5.3.2-C-1 of IS 456, should not be more than the least of,

- Least lateral dimension of column = 300mm.
- Sixteen times the smallest ø of longitudinal reinforcement bar to be tied =16x25 = 400mm.
- 300mm.

Let the pitch of the lateral ties be 300mm.

Provide 10mm dia. @300mm c/c

<u>REINFORCEMENT DETAILS</u>

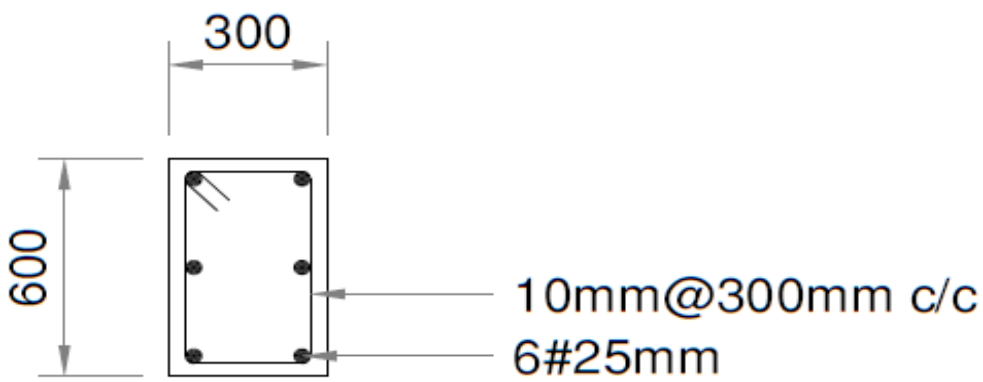

4. DESIGN OF FOOTING

GIVEN DATA:

Size of the column	= 300x600mm
Load on the column W_u	= 1076.81KN
Safe bearing capacity of soil, q_0	= 250 KN/mm^2
f_{ck}	= 25N/mm^2
f_y	= 415N/mm^2

WIDTH OF THE FOOTING:

Assume,

Self-weight of the footing, W_d = 87KN/m^3

Total load = W_u+ W_d

=1076.81+87

= 1163.81KN

Assume footing size = 2700x2400x750mm

Density of Soil	=	18	kN/cum
Soil Bearing Capacity	=	200	kN/sqm
Footing Type	:	Sloped	
Footing Size (Lx B x D)	:	2550mm X 2550mm X 550mm, d =275mm	
Column Offset	:	50	Mm
Effective Self Weight	=	68.74	kN

<u>Check For Maximum Soil Pressure:</u>

Pcomb	=	1187.55	kN
P	=	Pcomb + Effective Self Weight	
P	=	1256.29	kN
Mx	=	129.66	kNm
My	=	-5.28	kNm

P/A	=	193.2	kN/sqm
Mx/Zx	=	46.92	kN/sqm
My/Zy	=	-1.91	kN/sqm
Maximum Soil Pressure	=	242.03	kN/sqm
Allowable Soil Pressure	=	1.25x200	kN/sqm
	=	250	kN/sqm

Check For Minimum Soil Pressure:

Pcomb	=	246.31	kN
P	=	Pcomb + Effective Self Weight	
P	=	315.06	kN
Mx	=	-125.61	kNm
My	=	-3.35	kNm
P/A	=	48.45	kN/sqm
Mx/Zx	=	-45.45	kN/sqm
My/Zy	=	-1.21	kN/sqm
Minimum Soil Pressure	=	1.79	kN/sqm
	>	0	

Design For Bending:

Bottom Reinforcement Along L:

Pu	=	1075.39	kN
Mux	=	3.04	kNm
Muy	=	-6.47	kNm
P/A	=	165.38	kN/sqm
Mx/Zx	=	1.1	kN/sqm
My/Zy	=	-2.34	kN/sqm
Deff	=	502	mm
Beff	=	931.25	mm
SPu	=	166.48	kN/sqm

Mu	=	SPu X B X Loff X Loff / 2	
	=	201.78	kNm
Pt	=	0.248	%
Ast Rqd (BM)	=	1161	Sqmm

Ast Prv	=	15 - T10 @ 185	
	=	1178	Sqmm

Distributed Across Total Width

Top Reinforcement Along L:

(D+dmin) /2	=	412.50	mm
	<=	1000	mm, Hence
Ast	=	Min Pt for Top Reinforcement X [(D+dmin)/2] X B	
	=	0.06% X 413 X 2550	
	=	631	sqmm
Ast Prv	=	12 - T10 @ 300 c/c	
	=	785	sqmm

Bottom Reinforcement Along B:

Pu	=	1075.39	kN
Mux	=	3.04	kNm
Muy	=	-6.47	kNm
P/A	=	165.38	kN/sqm
Mx/Zx	=	1.1	kN/sqm
My/Zy	=	-2.34	kN/sqm
Deff	=	486	mm
Leff	=	931.25	mm
SPu	=	167.72	kN/sqm
Mu	=	SPu X L X Boff X Boff / 2	
	=	203.29	kNm
Pt	=	0.268	%
Ast Required (BM)	=	1213	sqmm
Ast Provided	=	16 - T10 @ 170	
	=	1257	sqmm

Distributed Across Total Length

Top Reinforcement

Along B:

(D+dmin) /2	=	413	Mm
	<=	1000	mm, Hence
Ast	=	Min Pt for Top Reinforcement X [(D+dmin)/2] X L	
	=	0.06% X 413 X 2550	
	=	631	sqmm
Ast Prv	=	12 - T10 @ 300 c/c	
	=	785	sqmm

REINFORCEMENT DETAILS:

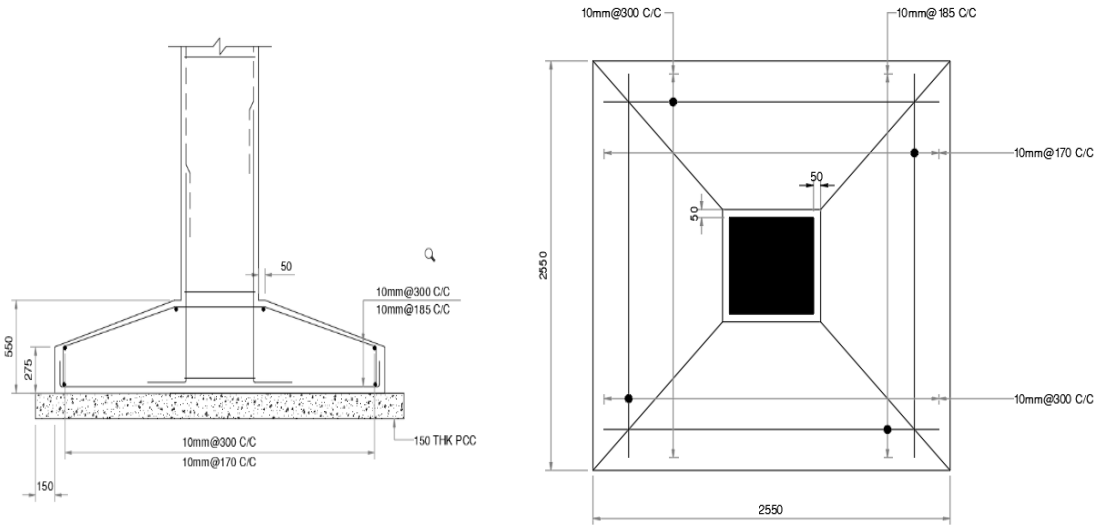

5. DESIGN OF STAIR CASE:

GIVEN DATA:

Rise, R = 150mm

Tread, T =300mm

Effective span, l = 5.3m

Assume, waist slab thickness ~ l/20 ~ 265mm

Waist slab thickness, t = 270mm

Assuming 20mm clear cover and 12mm ø

Effective depth, d = 270-20-12/2 = 250mm

The slab thickness I landing regions may be taken as 200mm as the bending moment are relatively low here.

Load calculation:

Dead load on slab on slope (Ws) = 0.27x1.5x25

= 10.125KN/m

Dead load of slab on horizontal span

$= Ws\sqrt{T^2+R^2}$

=11.32KN/m

Dead load on slab =0.5x0.15x0.3x25

= 0.56KN/m

Load of step 1m length =0.56x1000/300

= 1.86KN/m

Finishes= 0.5KN/m

Total dead load = 11.32+1.86+0.56

=13.74KN/m

Live load = 5KN/m

Total service load = 13.74+5

= 28.74KN/m

Factor load (Wu) = 1.5x18.74

= 28.11KN/m

BENDING MOMENT

Maximum bending moment at center span

$Mu = 0.125 x Wu x l^2$

$= 0.12 X 28.11 X 5.3^2$

= 98.70KN/m

CHECK FOR DEPTH ON WAIST SLAB

$d = \sqrt{Mu/0.138 x fck x b}$

d = 189.10mm<250mm

Hence ok

MAIN REINFORCEMENT:

$M_u = 0.87 f_y A_{st} d\{1-(f_y A_{st}/f_{ck} b d)\}$

$98.70 X 10^6 = 0.87 x 415 x A_{st} x 250\{1-(415 A_{st}/20x1000x250)\}$

$A_{st(req)} = 1093.874mm^2$

Use 12mm ø bars.

Spacing for 12mm ø bars,

S_v = (area of one bar / total area) x 1000

$= (a_{st}/A_{st}) x 1000$

$= [(\pi/4) x 12^2/ 1093.87] x 1000$

= 104mm.

Provide 12mm ø bars @ 100mm c/c.

Spacing for 16mm ø bars,

S_v = (area of one bar / total area) x 1000

= (a_{st}/A_{st}) x 1000

= $[(\pi/4) \times 16^2 / 1093.87] \times 1000$

= 185mm.

Provide 16mm ø bars @ 180mm c/c.

DISTRIBUTION REINFORCEMENT:

$A_{st(req)}$ = 0.12%Bd

= (0.12/100) x (1000x250) = 300mm^2

Provide 10mm ø bars

Spacing for 16mm ø bars,

S_v = (area of one bar / total area) x 1000

= (a_{st}/A_{st}) x 1000

= $[(\pi/4) \times 10^2 / 300] \times 1000$

= 237mm.

Provide 16mm ø bars @ 230mm c/c.

STAIRCASE REINFORCEMENT

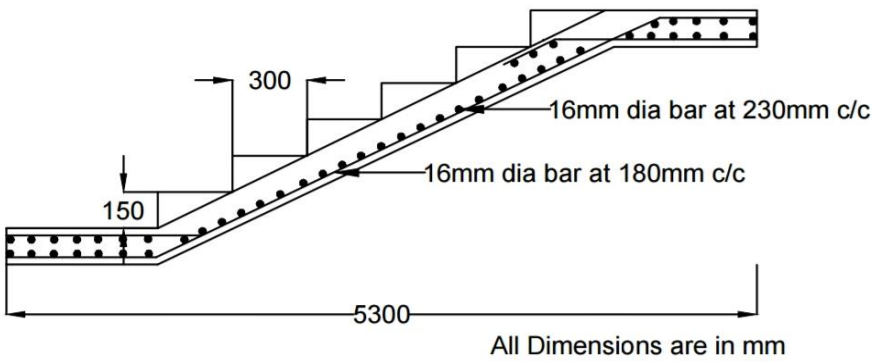

9.CONCLUSION

CONCLUSION

The sole purpose of a School building has been achieved in order to facilitate the students with all the facilities that were required to lead a proper life style and to become a good citizen of our Nation. It educates us with all the needed attributes in leading our life in a proper life style. Education does make a remarkable effect on one's personality. Getting educated and finally earning a professional degree prepares you to be a part and contribute in good organization, companies or institutions.

Moreover, it was a great experience to be exposed to practically design such a building rather than just studying the theoretical matters that were printed in the book

10. REFERENCES

REFERENCES

CODE BOOKS REFERRED

1. IS:456-2000
2. SP 16
3. IS:875 (Part 1) & (Part 2)
4. National Building Codes (NBC)

BOOKS REFERRED

1. Reinforced Concrete Structures – B. C. Punmia
2. Design of RCC Elements – N. Krishna Raju